ISSUED NO. RM952(FB)EUO3-0

Parts catalogue

Rabbit Mower

(EXPORT MODEL)

RM952

MODEL	CODE
RM952 EUO3	0346-○○○○

CONTENTS

Fig.1 Frame ---------- 1
Fig.2 Front Link Arm ---------- 15
Fig.3 Transmission & HST -------- 16
Fig.4 Handle ---------- 25
Fig.5 Front ---------- 29
Fig.6 Tire ---------- 35
Fig.7 Control ---------- 36
Fig.8 Cutting ---------- 39
Fig.9 Seat ---------- 45
Fig.10 Engine ---------- 48
Fig.11 Label ---------- 53

OREC CO.,LTD

Update : Dec. 2023

1/55 Frame 1/14

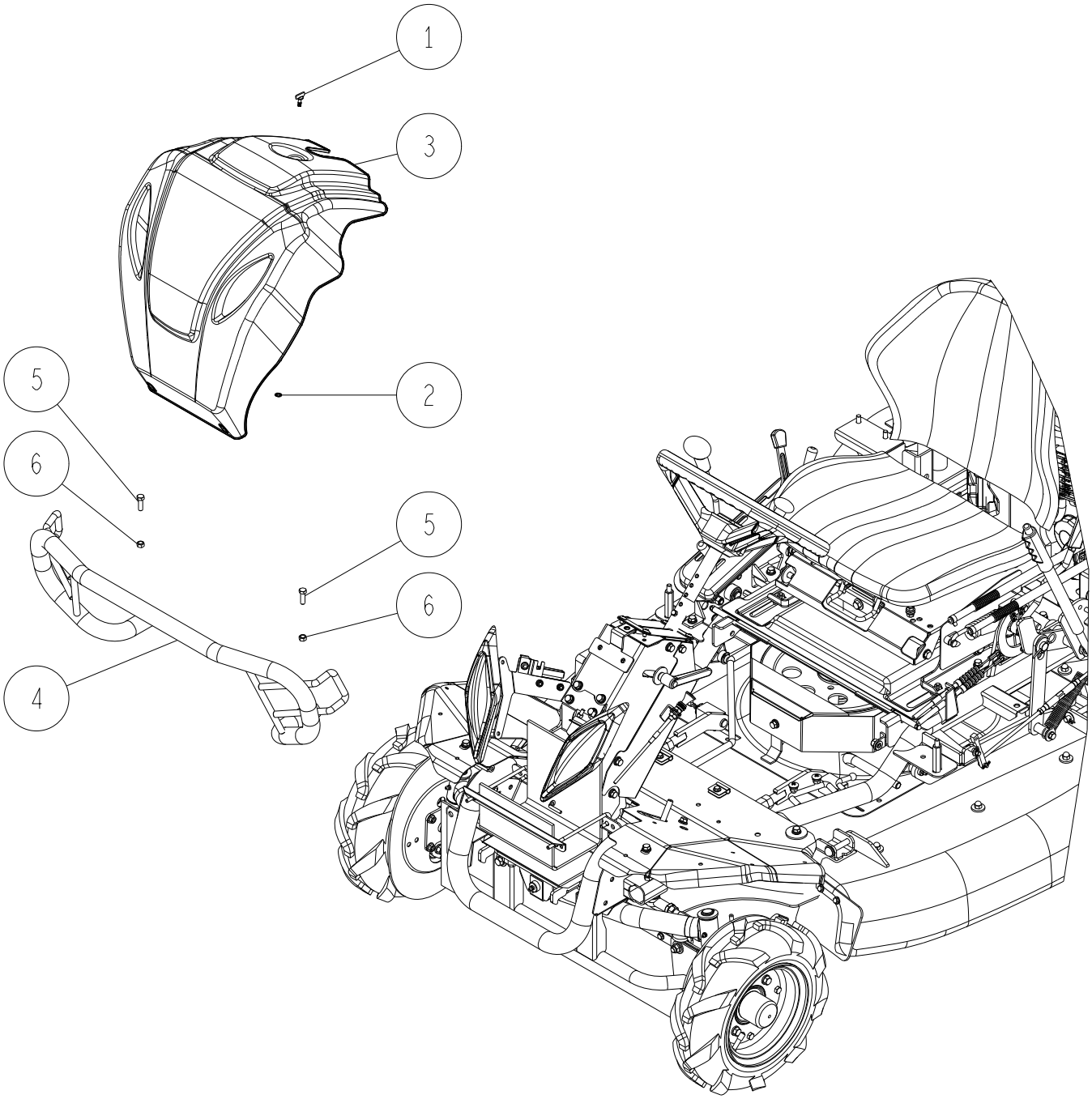

Ref.	Parts Number	Parts Name	Quantity	Remarks	R/P
1	0322-71200	Wing Stud φ 6*14	1		
2	0322-71700	Retainer	1		
3	0347-14700	Front Cover	1		
4	0347-2060G	Step Bumper CMP (Green)	1		
5	89-1211-080252	Mini Hexagonal Bolt M8*25	2		
6	89-1611-080042	Mini Hexagonal Nut M8	2		

2/55 Frame 2/14

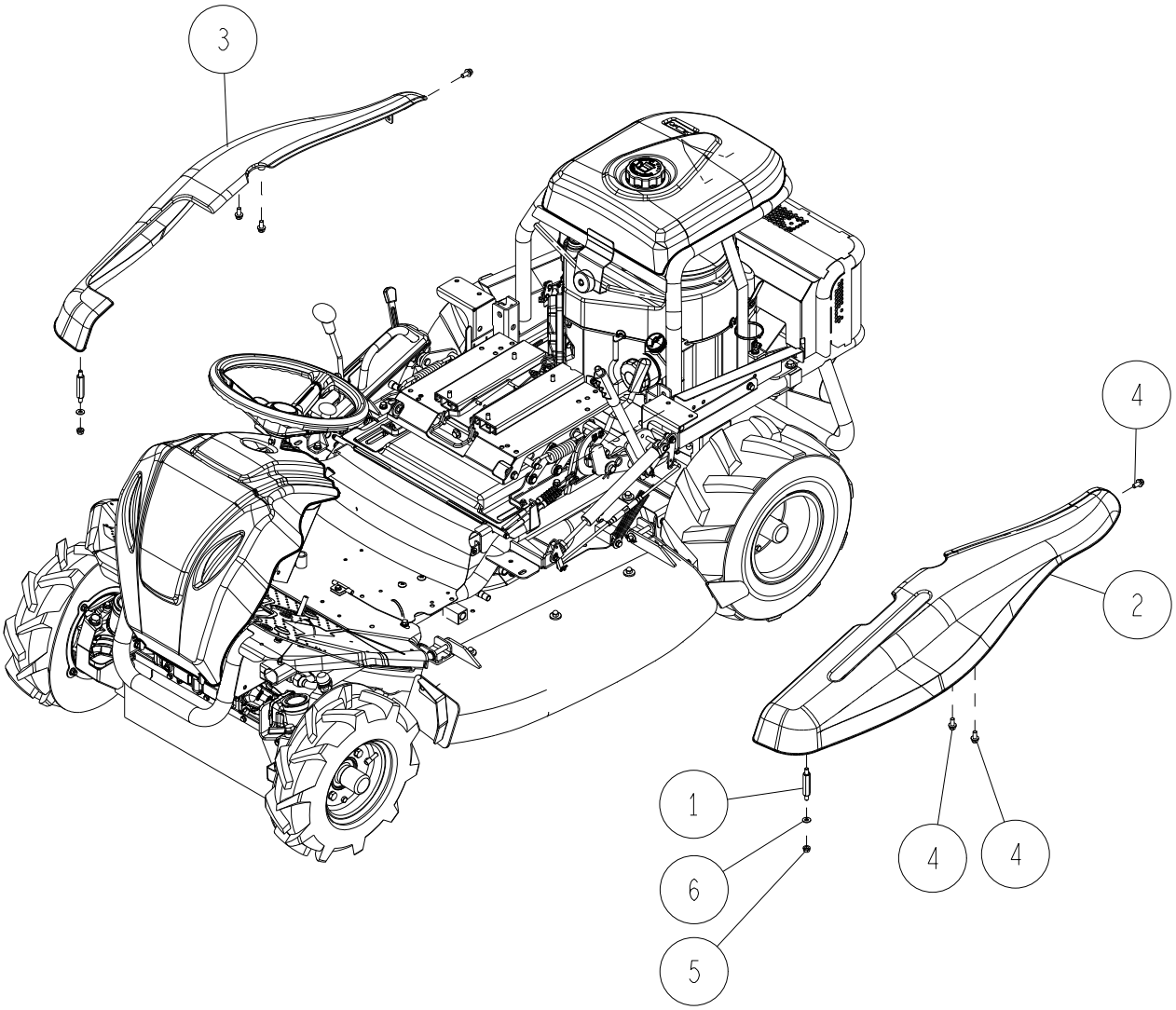

Ref.	Parts Number	Parts Name	Quantity	Remarks
1	0267-40900	Double Spring Bolt M	2	
2	0342-73600	Side Cover (L) (White)	1	
3	0342-73500	Side Cover (R) (White)	1	
4	89-1233-080162	Mini Hexagonal Bolt (PWSW) M8*16	6	
5	89-1543-080002	Mini Hexagonal Nut (SW) M8	2	
6	89-1714-080002	Flat Washer 8	2	

3/55 Frame 3/14

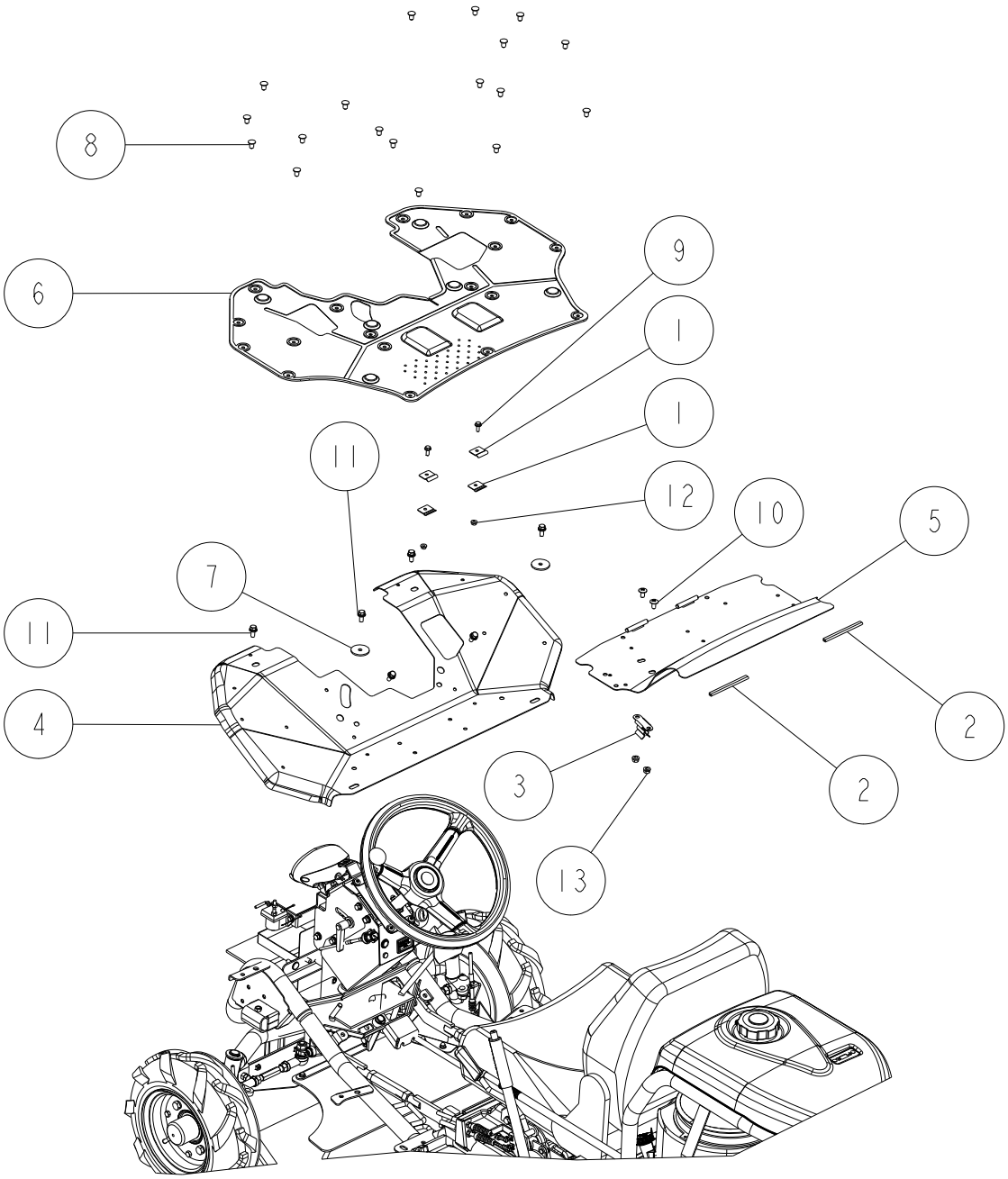

Ref.	Parts Number	Parts Name	Quantity	Remarks
1	0028-70500	Center Step Hinge	4	
2	0301-60400	Rubber 110L	2	
3	0312-70400	Bonnet Clip	1	
4	0348-2510G	Step (Green)	1	
5	0348-2520G	Center Step CMP (Green)	1	
6	0348-70100	Step Rubber	1	
7	83-1020-314-00	Washer 8*40*2.3	2	
8	83-1484-369-00	Clip (5347)	18	
9	89-1137-060172	Hexagonal Bolt (PW) M6*17	2	
10	89-1159-080168	Truss Mini Screw M8*16	2	
11	89-1233-080202	Mini Hexagonal Bolt (PWSW) M8*20	6	
12	89-1531-060042	Flange Nut M6	2	
13	89-1543-080002	Mini Hexagonal Nut (SW) M8	2	

4/55 Frame 4/14

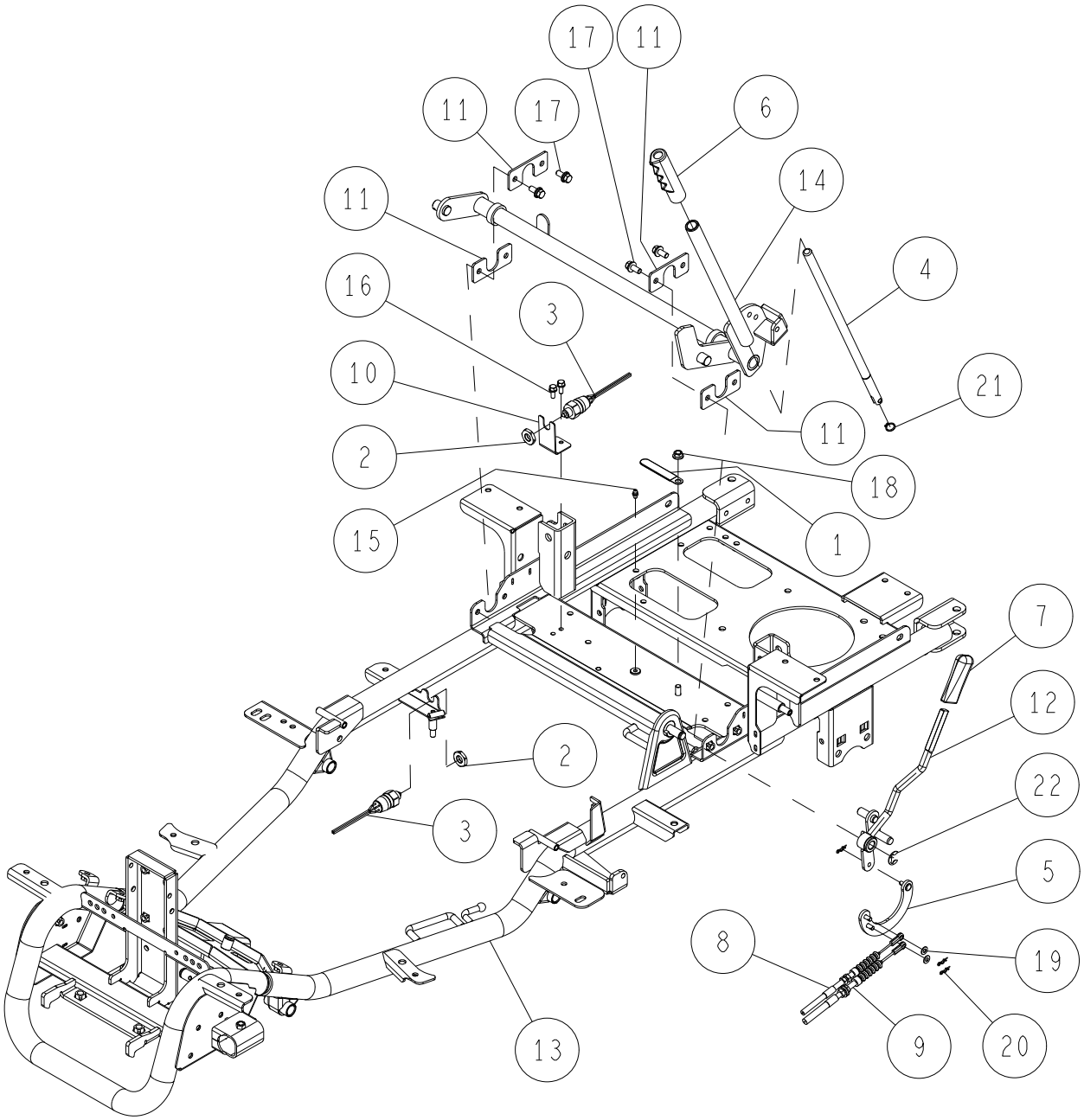

Ref.	Parts Number	Parts Name	Quantity	Remarks
1	0348-2020G	Rear Frame CMP (Green)	1	
2	89-1213-100652	Mini Hexagpnal Bolt (8T) M10*65	2	
3	89-1631-100042	Flange Mini Hexagonal Nut M10	2	
4	89-1714-100002	Flat Washer 10	2	

5/55 Frame 5/14

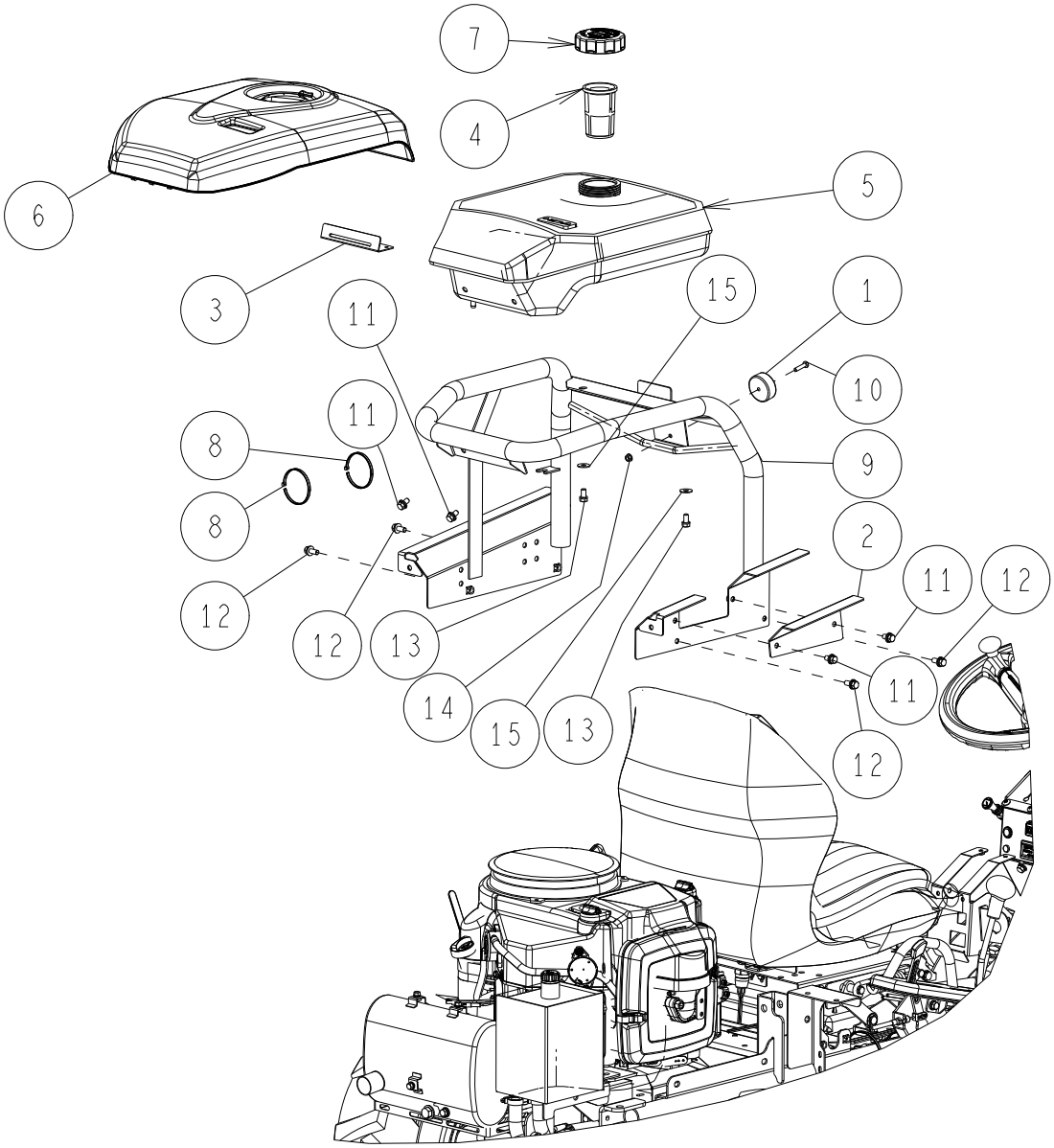

Ref.	Parts Number	Parts Name	Quantity	Remarks
-	0322-71000	Fuel Tank Assy	1	Include : 4,5,7
1	80-1920-306-00	Stopper Rubber B-4	1	
2	0322-6020G	Rear Fender Cover (R) (Green)	1	
3	0322-60401	Fuel Tank Cover Stay (White)	1	
4	0322-70700	Fuel Filter	1	
5	0322-71800	Fuel Tank (with Fuel Gauge)	1	
6	0322-73200	Tank Cover White	1	
7	0322-76000	Fuel Tank Cap Assy (with valve)	1	
8	0341-71200	Cable Ties 200L Black	2	
9	0348-2030G	Tank Holder CMP (Green)	1	
10	89-1111-060252	Hexagonal Bolt M6*25	1	
11	89-1233-080162	Mini Hexagonal Bolt (PWSW) M8*16	4	
12	89-1233-080202	Mini Hexagonal Bolt (PWSW) M8*20	4	
13	89-1238-080162	Mini Hexagonal Bolt (SW) M8*16	2	
14	89-1531-060042	Flange Nut M6	1	
15	89-1713-080002	Flat Washer 8 (large)	2	

6/55 Frame 6/14

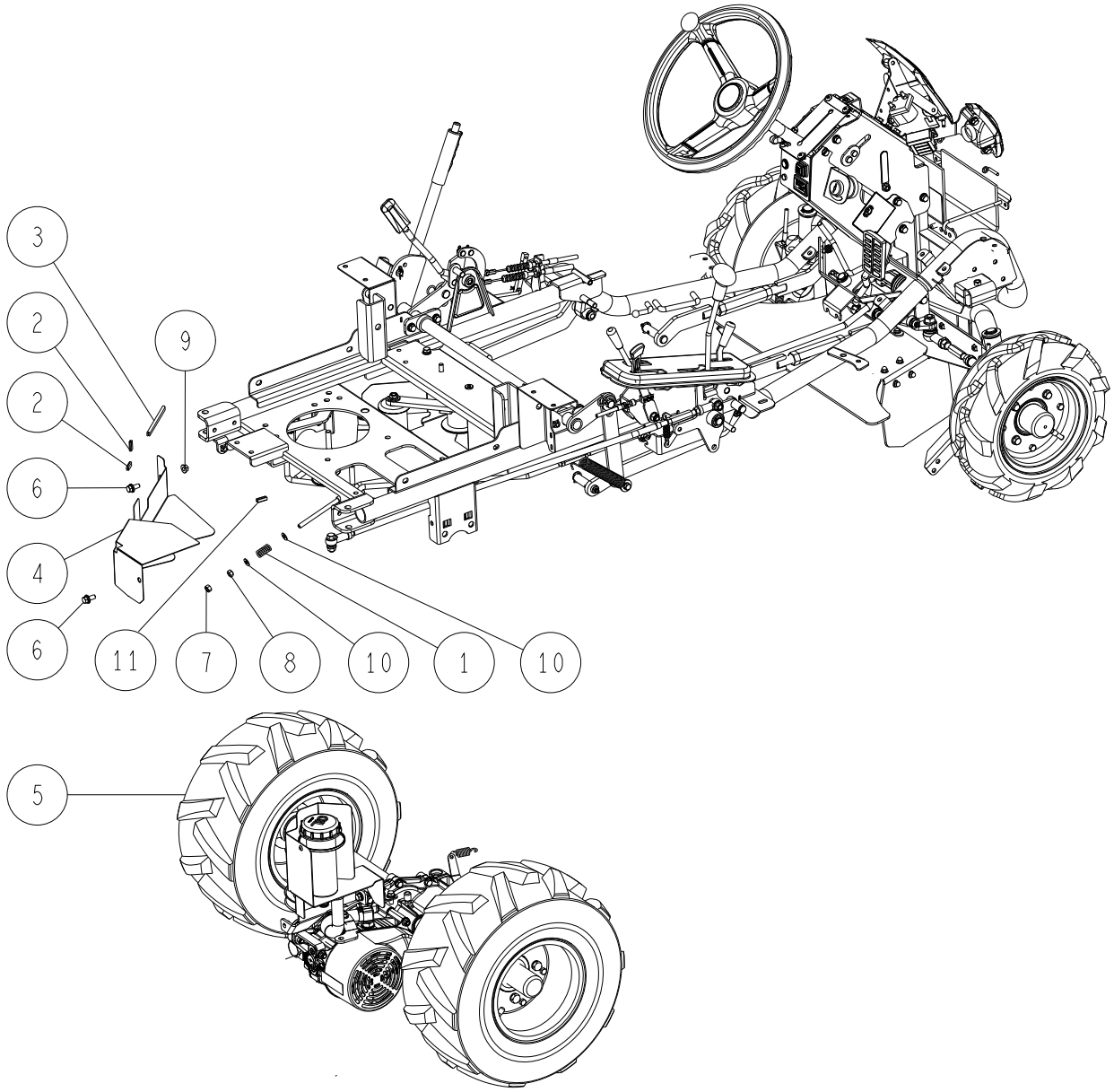

Ref.	Parts Number	Parts Name	Quantity	Remarks
1	0207-75400	Brake Spring 30	1	
2	0229-13100	Rubber, L20	2	Briggs & Stratton
3	0301-60400	Rubber 110L	1	Kawasaki
4	0348-2040H	Rear Belt Cover (Metallic Grey)	1	
5	Transmission & Hst Part	-	1	Page 16 ~
6	89-1233-080202	Mini Hexagonal Bolt (PWSW) M8*20	2	
7	89-1561-080002	Mini Hexagonal U Nut M8	1	
8	89-1611-080042	Mini Hexagonal Nut M8	1	
9	89-1631-080042	Flange Mini Hexagonal Nut M8	1	
10	89-1711-080002	Flat Washer 8	2	
11	0322-73800	Rubber	1	Briggs & Stratton

7/55 Frame 7/14

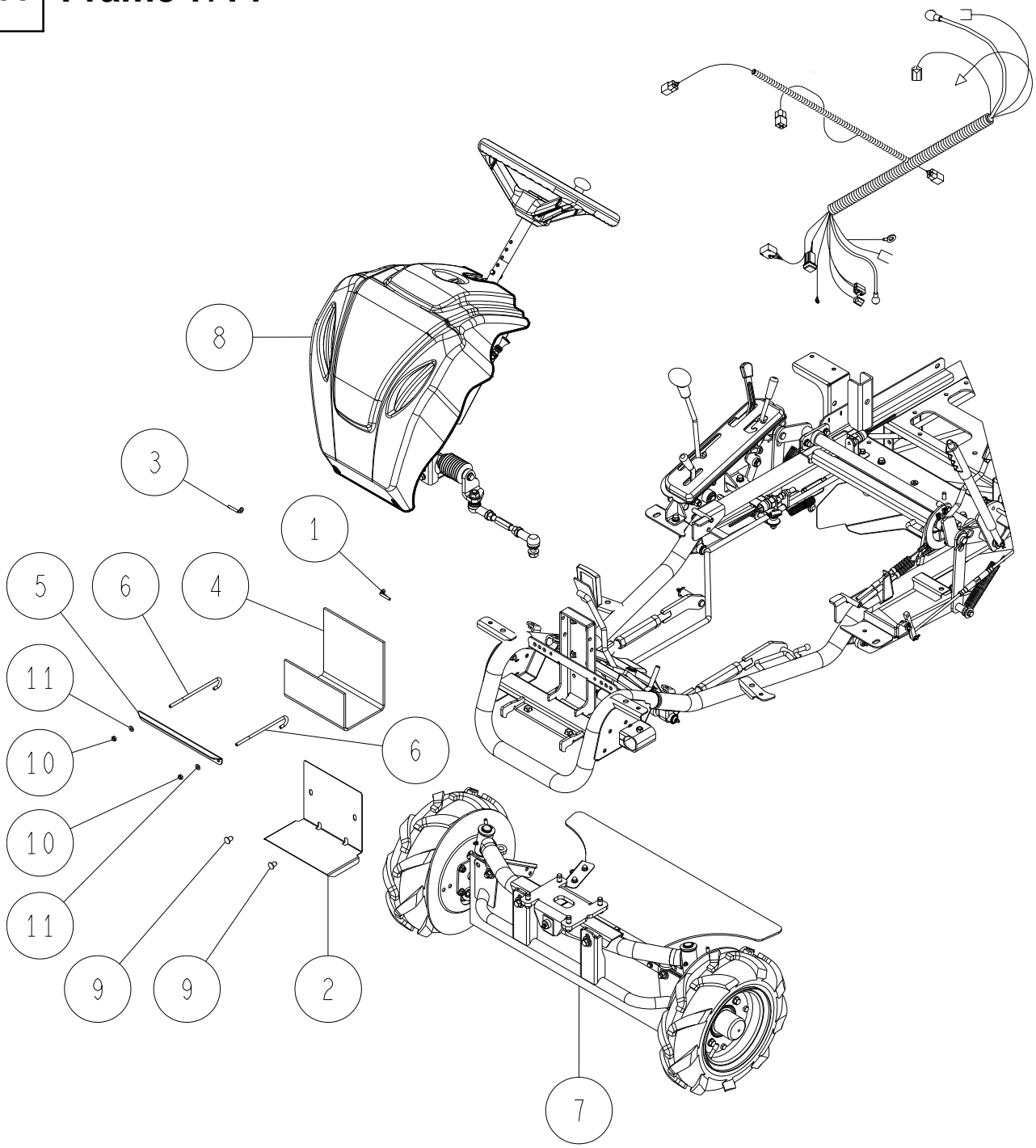

Ref.	Parts Number	Parts Name	Quantity	Remarks
1	0207-77100	Battery Plus Cord 230	1	
2	0322-2210H	Battery Carrier (Metallic Grey)	1	
3	0322-72200	Battery Minus Cord	1	
4	0322-72300	Cushion Rubber (Battery)	1	
5	0348-2070H	Battery Setting Stay (Metallic Grey)	1	
6	0348-20800	Battery Setting Bolt	2	
7	Front Part	-	1	Page 29 ~
8	Handle Part	-	1	Page 25 ~
9	83-1484-369-00	Clip (5347)	2	
10	89-1551-060002	Hexagonal U Nut M6	2	
11	89-1711-060002	Flat Washer 6	2	
12	0346-70300	Wire Harness Long (RM952/K)	1	

8/55 Frame 8/14

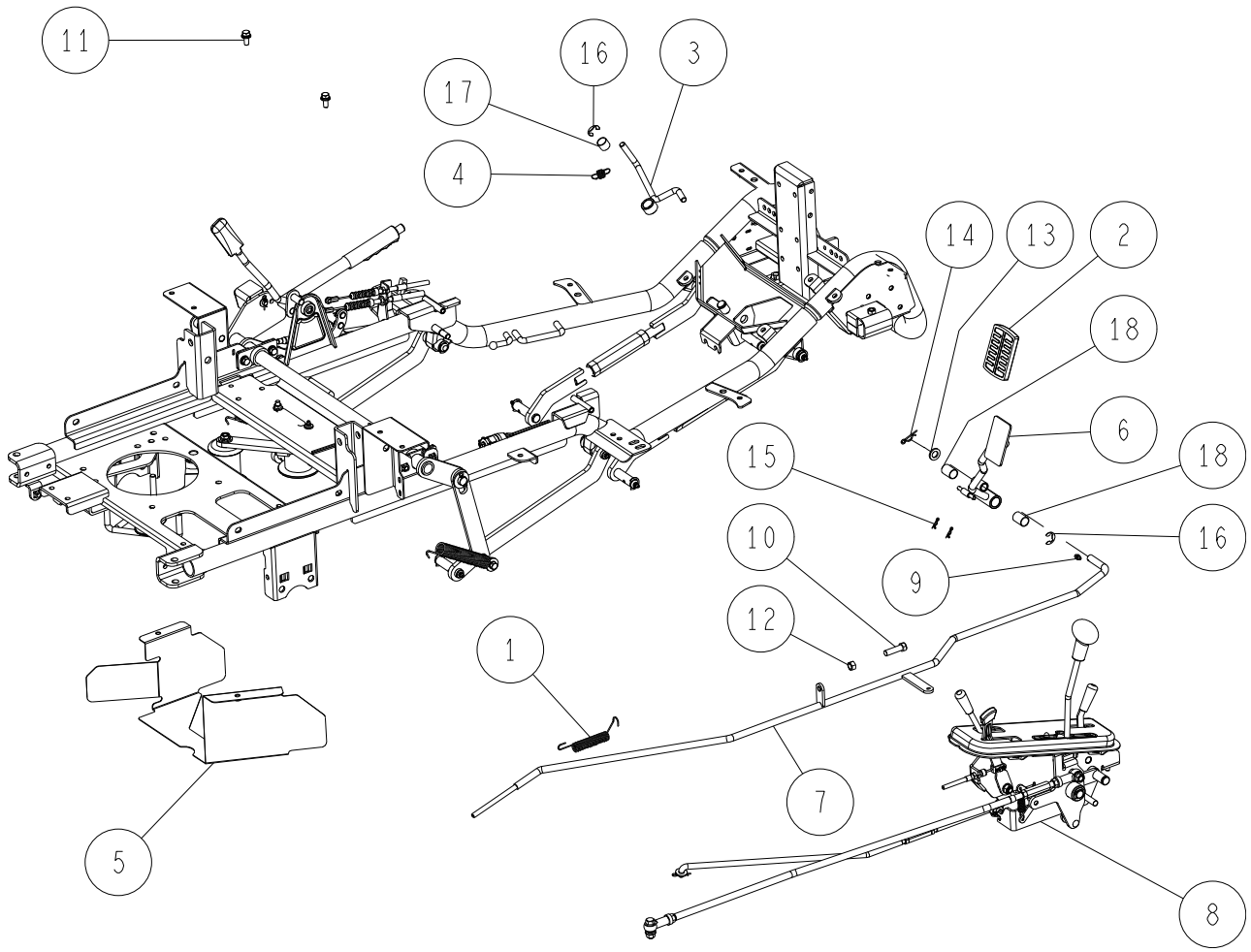

Ref.	Parts Number	Parts Name	Quantity	Remarks
1	80-1493-354-00	Rod Return Spring	1	
2	0312-71100	Brake Pedal Rubber	1	
3	0312-23100	Brake Stopper CMP	1	
4	0312-23200	Brake Stopper Return Spring	1	
5	0329-6021H	Center Belt Cover CMP (Metallic Grey)	1	
6	0348-1050H	Brake Pedal CMP (Metallic Grey)	1	
7	0348-13100	Brake Rod CMP	1	
8	Control Part	-	1	Page 36 ~
9	83-1415-975-00	Grease Nipple M6	1	
10	89-1113-100357	Hexagonal Bolt (8T) M10*35	1	
11	89-1233-080162	Mini Hexagonal Bolt (PWSW) M8*16	2	
12	89-1611-100042	Mini Hexagonal Nut M10	1	
13	89-1711-120002	Flat Washer 12	1	
14	89-2131-120002	Snap Pin 12	1	
15	89-2132-060002	Snap Pin 6 (with stopper)	2	
16	89-2521-000120	E Type Ring 12	2	
17	89-3510-016150	DU Bush 16.15	1	
18	89-3510-016250	DU Bush 16.25	2	

9/55 Frame 9/14

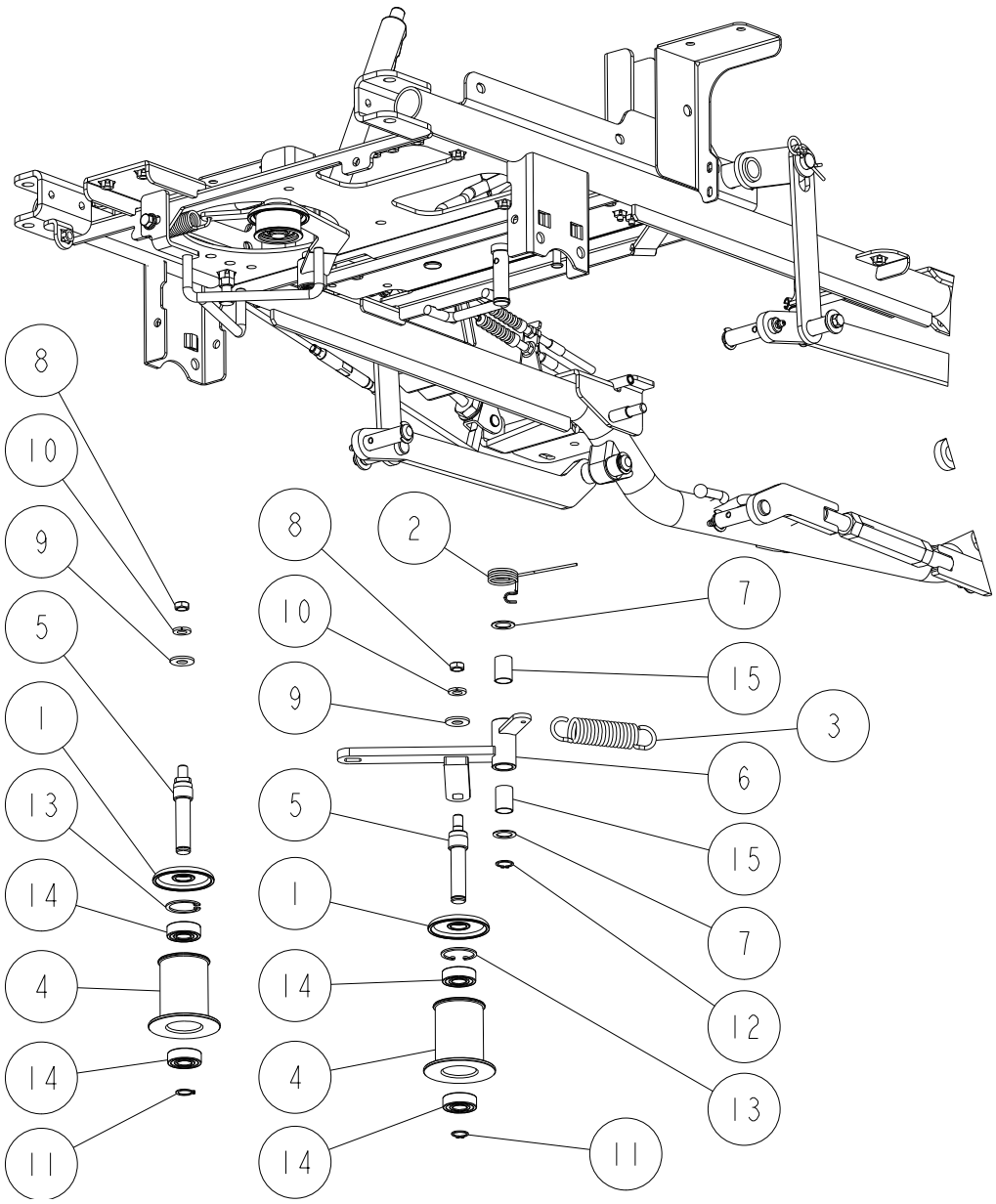

Ref.	Parts Number	Parts Name	Quantity	Remarks
-	0227-41000	Knife Tension Pulley (A) Set	2	Include : 4,5,11,13,14
1	80-1482-549-00	Rubber Cover 58	2	
2	80-1483-568-00	Knife Tension Return Spring	1	
3	0207-78400	Spring For Knife Tension Return	1	
4	0227-40300	Knife Tension Pulley (A)	2	
5	0244-42800	Tension Idler Shaft	2	
6	0329-4120H	Knife Tention Arm CMP (Metallic Grey)	1	
7	83-1020-363-00	Thrust Washer 16*24*1.0	2	
8	89-1613-100042	Mini Hexagonal Nut (3 sorts) M10	2	
9	89-1713-100002	Flat Washer 10 (large)	2	
10	89-1750-100002	Spring Washer 10	2	
11	89-2511-000150	Snap Ring (S15)	2	
12	89-2511-000160	Snap Ring (S16)	1	
13	89-2512-000350	Snap Ring (R35)	2	
14	89-3115-062024	Bearing 6202 2RS	4	
15	89-3510-016250	DU Bush 16.25	2	

10/55 Frame 10/14

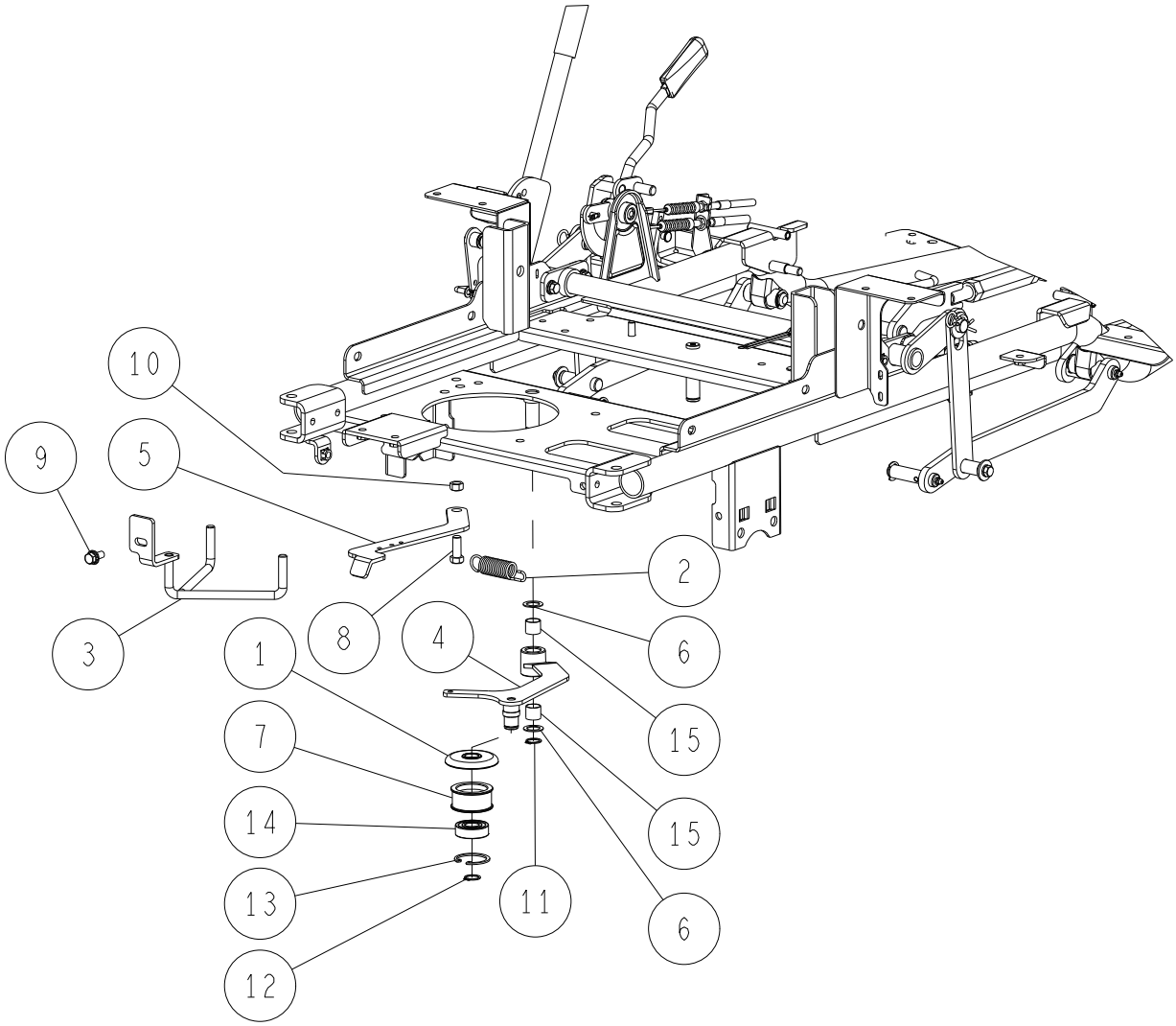

Ref.	Parts Number	Parts Name	Quantity	Remarks
-	83-1032-760-00	Tension Pulley Assy	1	Include : 7,13,14
1	80-1482-549-00	Rubber Cover 58	1	
2	80-1485-551-00	Driving Tension Spring	1	
3	0322-4130H	Belt Holder CMP (Metallic Grey)	1	
4	0322-4110H	Drive Tention Arm (Metallic Grey)	1	Include : 4,15
5	0322-4140H	Drive Tention Spring Arm (Metallic Grey)	1	
6	83-1020-363-00	Thrust Washer 16*24*1.0	2	
7	83-1032-765-00	Tension Pulley	1	
8	89-1211-100252	Mini Hexagonal Bolt M10*25	1	
9	89-1233-080202	Mini Hexagonal Bolt (PWSW) M8*20	1	
10	89-1611-100042	Mini Hexagonal Nut M10	1	
11	89-2511-000160	Snap Ring (S16)	1	
12	89-2511-000170	Snap Ring (S17)	1	
13	89-2512-000400	Snap Ring (R40)	1	
14	89-3115-062034	Bearing 6203 2RS	1	
15	89-3510-016150	DU Bush 16.15	2	

11/55 Frame 11/14

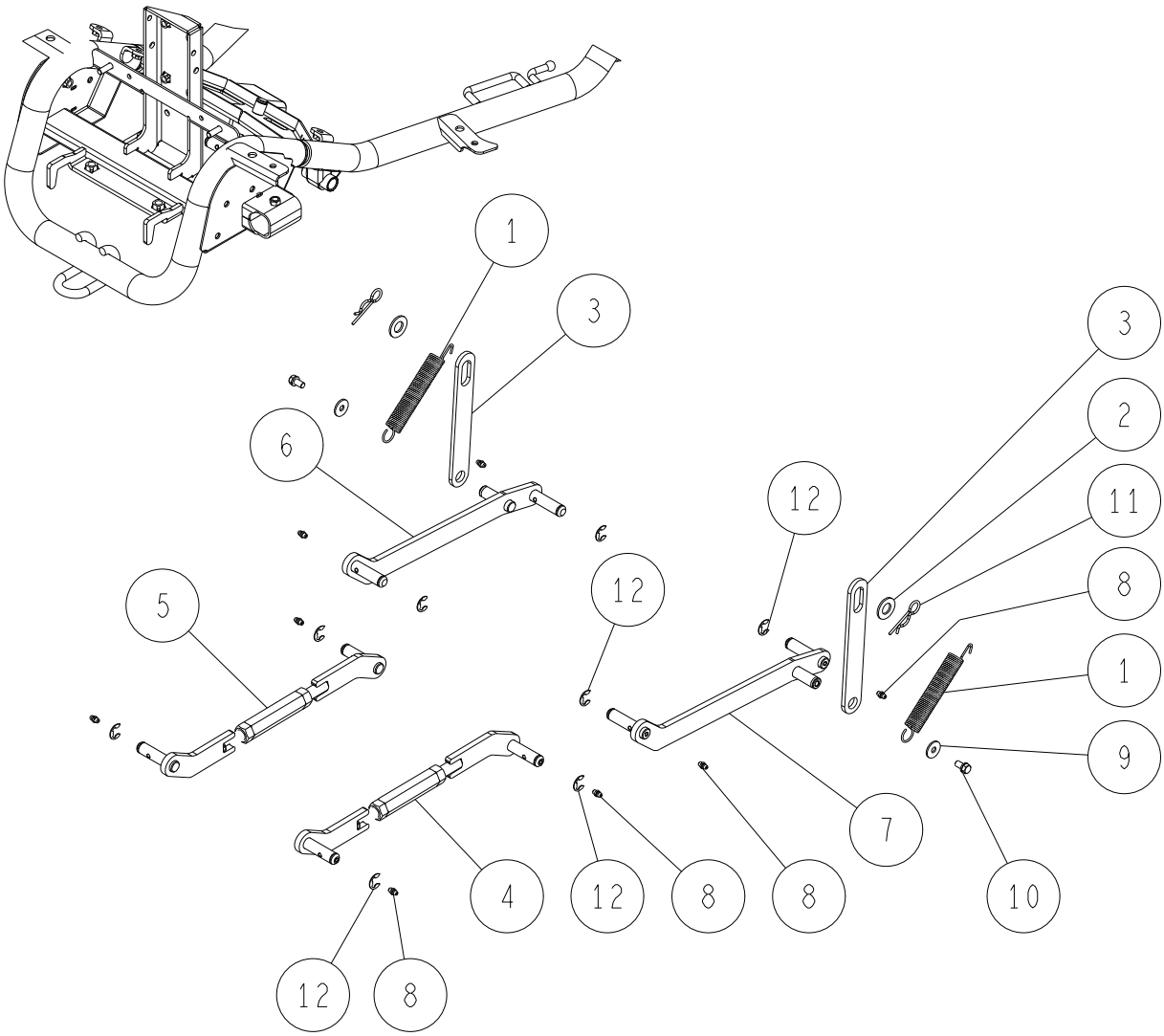

Ref.	Parts Number	Parts Name	Quantity	Remarks
1	80-1484-276-10	Spring (Up/Down)	2	
2	0207-76800	Washer 16*32*2.3	2	
3	0244-1040H	Connecting Plate (Metallic Grey)	2	
4	0312-5500H	Front Link CMP (Left) (Metallic Grey)	1	
5	0312-5600H	Front Link CMP (Right) (Metallic Grey)	1	
6	0348-5050H	Rear Link Arm (R) CMP (Metallic Grey)	1	
7	0348-5060H	Rear Link Arm (L) CMP (Metallic Grey)	1	
8	83-1415-975-00	Grease Nipple M6	8	
9	83-1751-311-00	Flat Washer 8*25*2.3	2	
10	89-1232-080162	Mini Hexagonal Bolt (SW) M8*16	2	
11	89-2131-160002	Snap Pin 16	2	
12	89-2521-000120	E Type Ring 12	8	

12/55 Frame 12/14

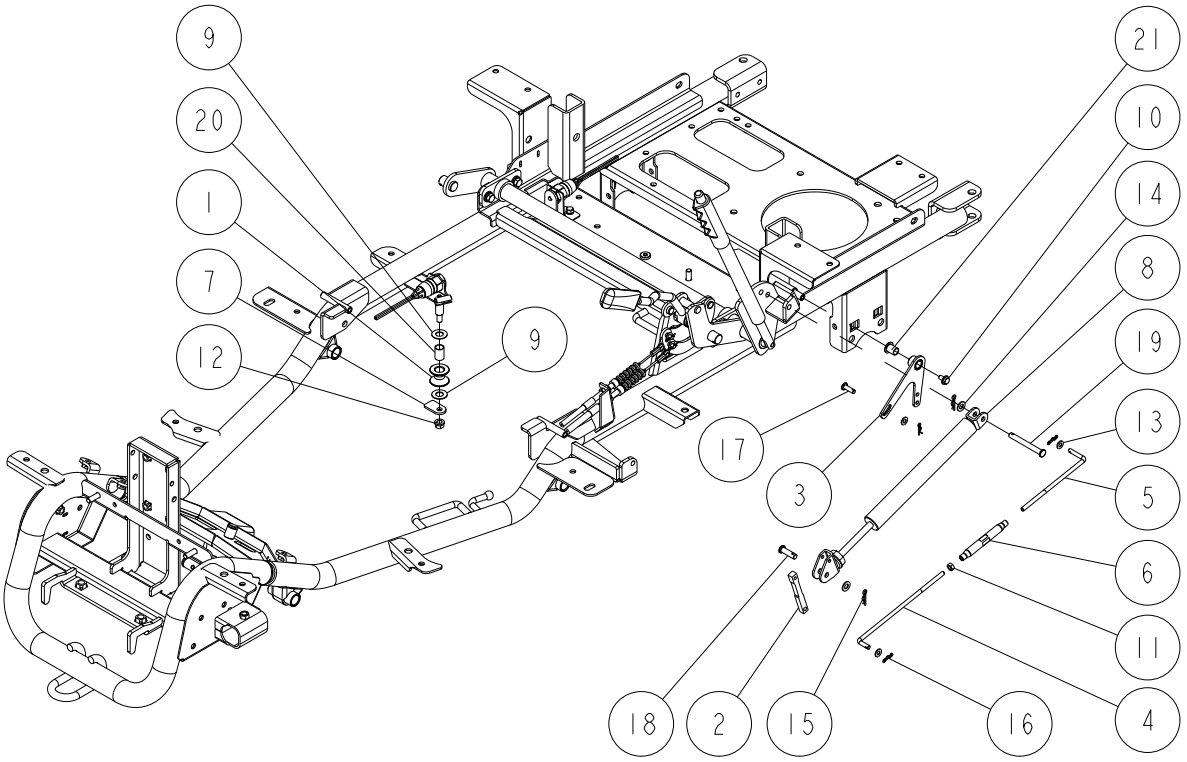

Ref.	Parts Number	Parts Name	Quantity	Remarks
-	0255-70400	Gas Spring Free Lock Type(FLC75- 35) set	1	Include : 2,8
-	0244-11000	Adjusting Rod Assy	1	Include : 4,5,6,11
1	80-1484-354-10	Brake Rod Roller	1	
2	0244-10500	Lock Pusher	1	
3	0244-11300	Push Rod Receiver CMP	1	
4	0244-11400	Adjuster Rod (R)	1	
5	0244-11500	Adjuster Rod (L)	1	
6	0244-11600	Turn Buckle (Pipe Type)	1	
7	0244-22600	Brake Rod Hung Plate	1	
8	0255-70100	Gas Spring Free Lock Type(FLC75-35)	1	
9	83-1020-355-00	Thrust Washer 12*24*1.0	2	
10	89-1137-060122	Hexagonal Bolt (PW) M6*12	1	
11	89-1511-060042	Hexagonal Nut M6	1	
12	89-1543-080002	Mini Hexagonal Nut (SW) M8	1	
13	89-1711-060002	Flat Washer 6	3	
14	89-1711-080002	Flat Washer 8	2	
15	89-2131-080002	Snap Pin 8	2	
16	89-2132-060002	Snap Pin 6 (with stopper)	3	
17	89-2181-060202	Flat Head Pin 6*20	1	
18	89-2181-080282	Flat Head Pin 8*28	1	
19	89-2181-080692	Flat Head Pin 8*69	1	
20	89-3510-012200	DU Bush 12.20	1	
21	89-3511-010150	DU Bush 10.15.18F	1	

13/55 Frame 13/14

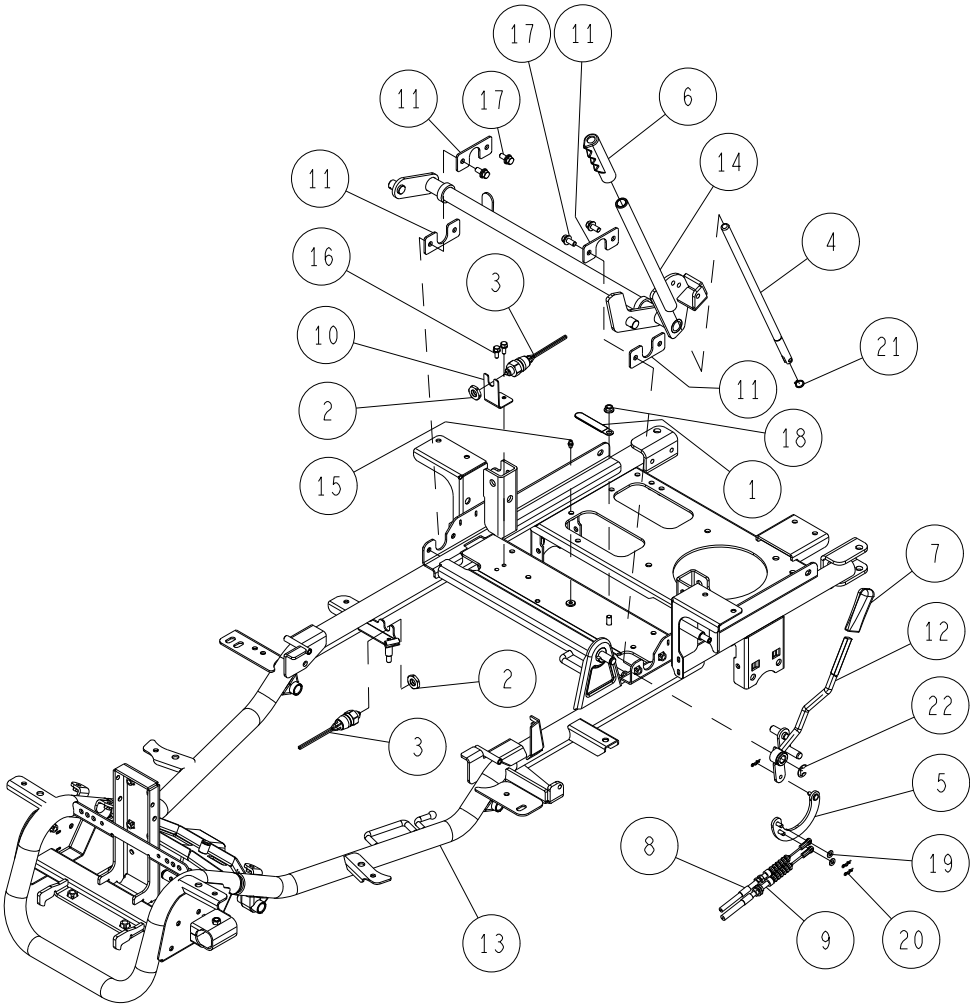

Ref.	Parts Number	Parts Name	Quantity	Remarks
1	80-1792-988-00	Harness Clip 8	2	
2	0207-72800	Switch Lock Nut	1	
3	0207-74400	Safety Switch K17850	1	
4	0244-10600	Push Rod	1	
5	0244-13700	Wire Joint CMP	1	
6	0244-70200	Adjusting Shaft Grip	1	
7	0289-71300	Arm Grip (Red)	1	
8	0322-13300	Safety Switch Setting Plate	1	
9	0348-1210H	Knife Clutch Lever CMP (Metallic Grey)	1	
10	0322-75110	Knife Clutch Wire	1	
11	0322-75210	Knife Brake Wire	1	
12	0348-5041H	Up/Down Adjusting Shaft CMP (Metallic Grey)	1	
13	0348-2011H	Frame CMP (Metallic Grey)	1	
14	0342-10100	Connecting Shaft Stay	4	
15	83-1415-975-00	Grease Nipple M6	1	
16	89-1132-060162	Hexagonal Bolt (SW) M6*16	2	
17	89-1233-080202	Mini Hexagonal Bolt (PWSW) M8*20	4	
18	89-1631-080042	Flange Mini Hexagonal Nut M8	1	
19	89-1711-060002	Flat Washer 6	2	
20	89-2132-060002	Snap Pin 6 (with stopper)	3	
21	89-2511-000130	Snap Ring (S13)	1	
22	89-2521-000120	E Type Ring 12	1	

14/55 Frame 14/14

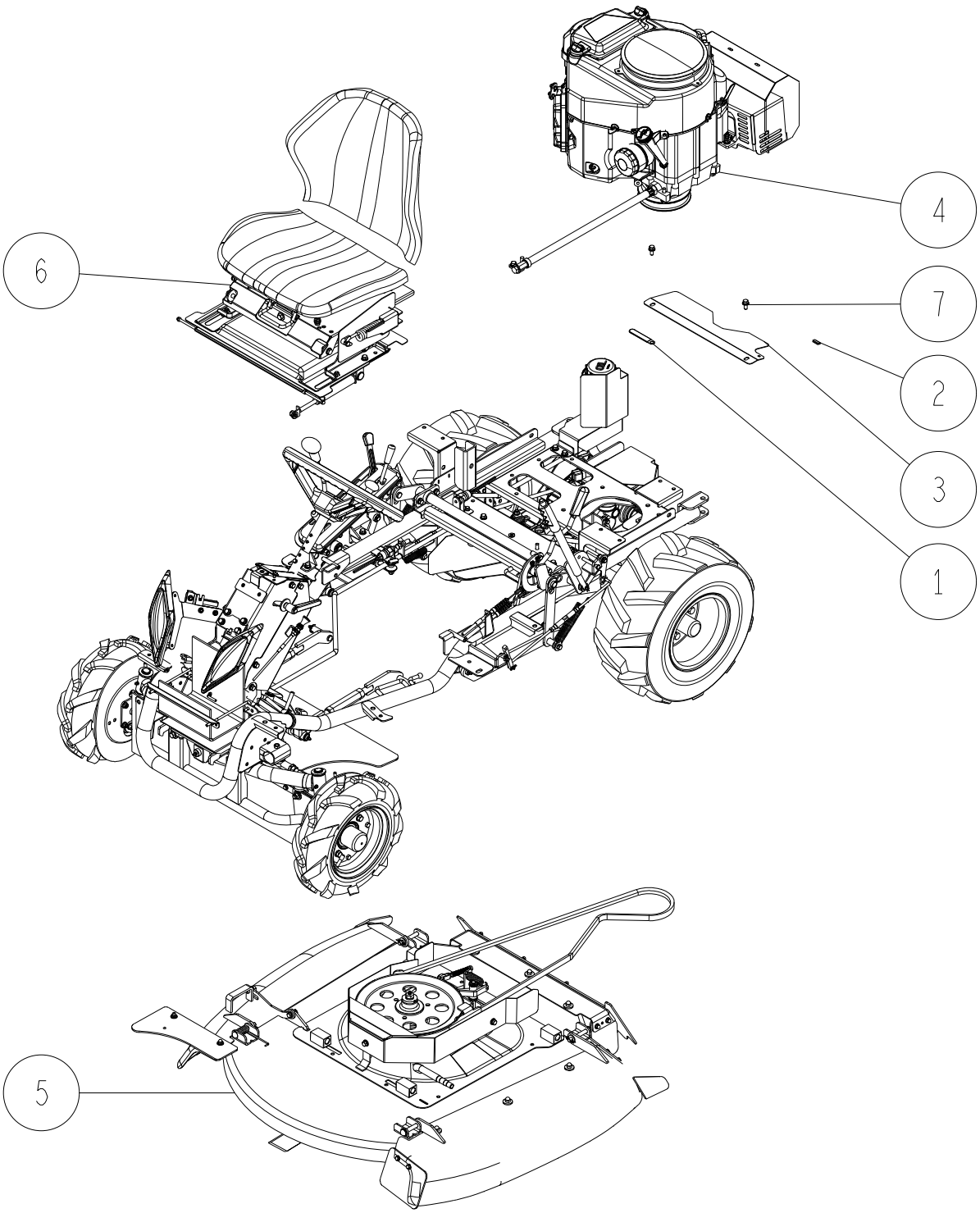

Ref.	Parts Number	Parts Name	Quantity	Remarks
1	80-1792-988-00	Harness Clip 8	1	
2	0229-13100	Rubber, L20	1	
3	0322-2250H	Upper Belt Cover (Metallic Grey)	1	
4	-	Engine Part	1	Page 48 ~
5	-	Cutting Part	1	Page 39 ~
6	-	Seat Part	1	Page 45 ~
7	89-1233-080202	Mini Hexagonal Bolt (PWSW) M8*20	2	

15/55 Front Link Arm 1/1

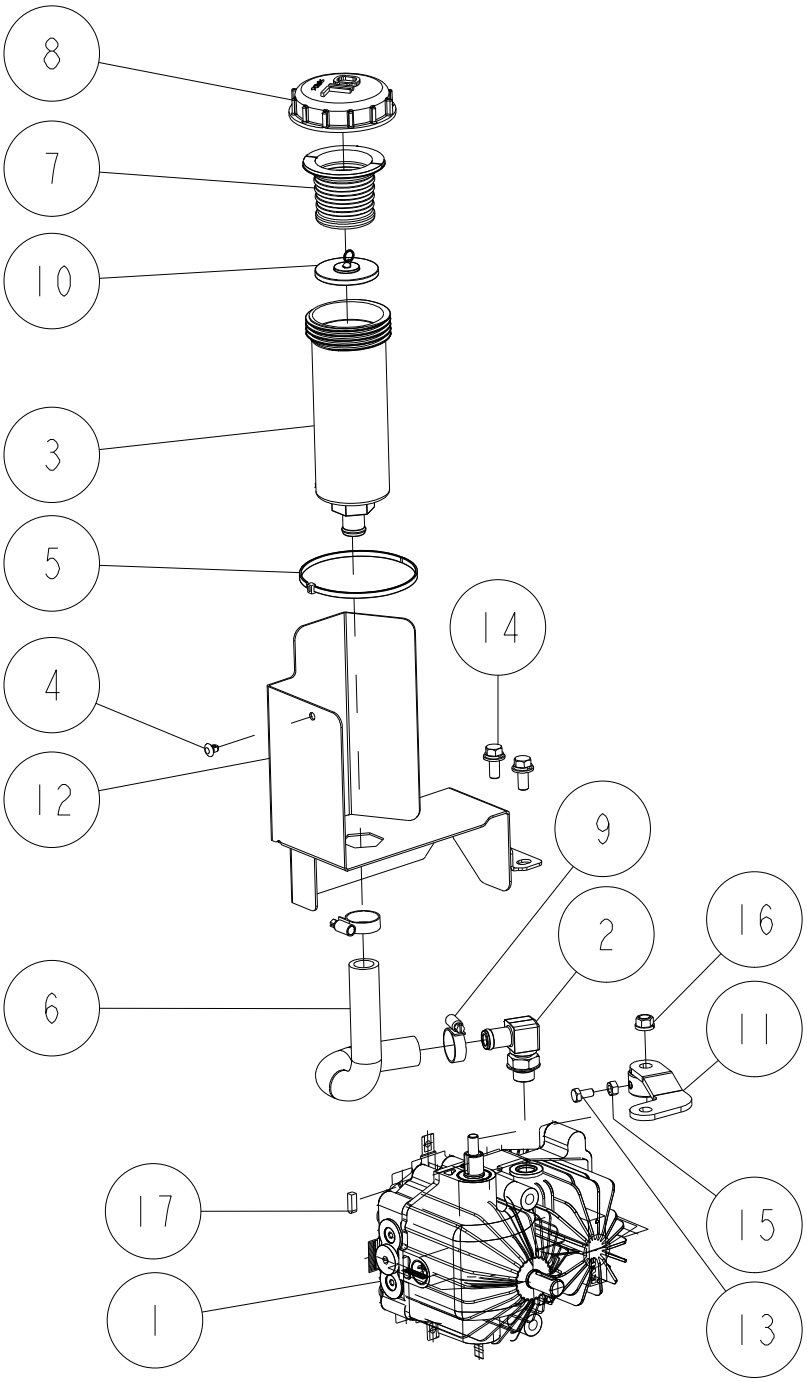

Ref.	Parts Number	Parts Name	Quantity	Remarks
-	0312-56000	Front Link Arm (R) Assy	1	Include : 1,2,4,6,7
-	0312-55000	Front Link Arm (L) Assy	1	Include : 1,2,3,5,7
1	0255-50600	Link Arm Adjuster	2	
2	0255-70200	Hexagonal Nut M16(L)	2	
3	0312-5110H	Front Link CMP (Left) (Metallic Grey)	1	
4	0312-5210H	Front Link CMP (Right) (Metallic Grey)	1	
5	0312-5510H	Front Link Arm CMP (Left) (Metallic Grey)	1	
6	0312-5610H	Front Link Arm CMP (Right) (Metallic Grey)	1	
7	89-1511-160042	Hexagonal Nut M16	2	

16/55 Transmission & HST 1/9

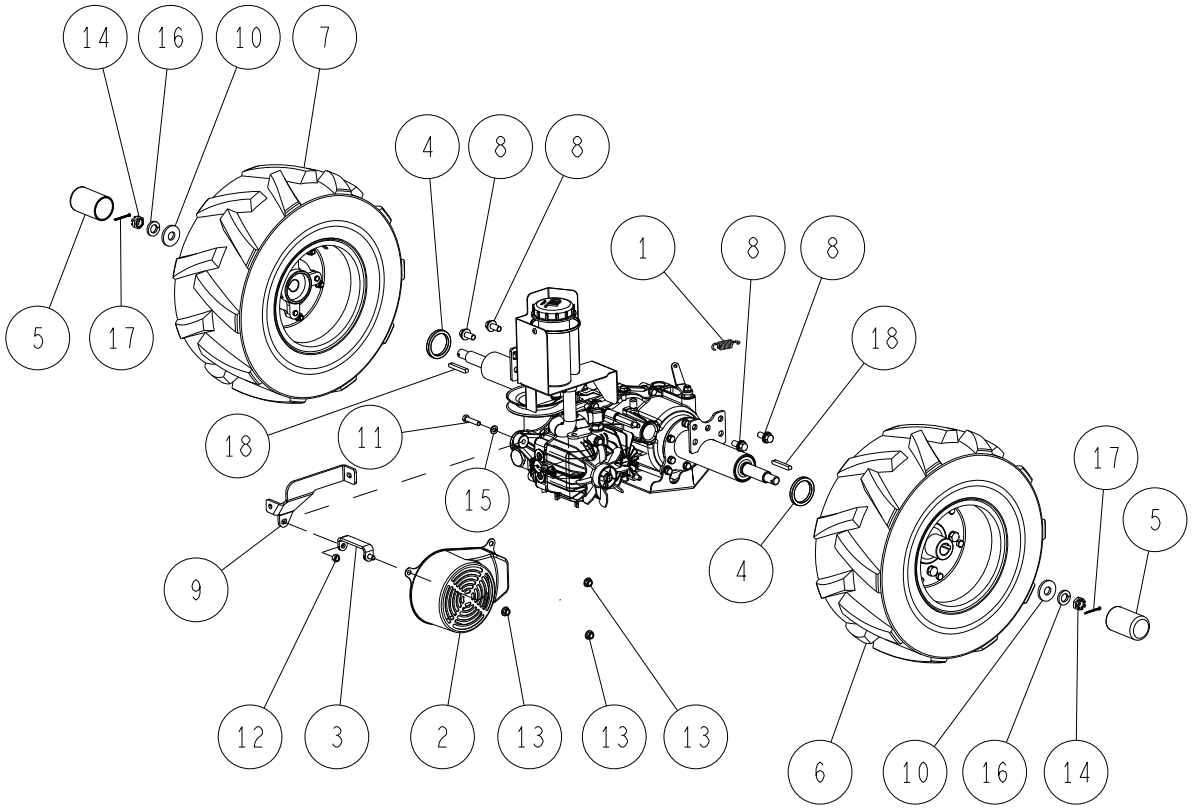

Ref.	Parts Number	Parts Name	Quantity	Remarks
1	80-1425-551-00	Differential Lock Spring	1	
2	0207-0720H	Fan Cover (Metallic Grey)	1	
3	0207-0740H	Fan Cover Stay CMP (Metallic Grey)	1	
4	0207-77800	Wheel Boss Dust Seal	2	
5	0227-70600	Rear Wheel Cap (φ42*75L)	2	
6	0244-74300	Rear Tire (R) Assy (17×8.00-8)(Include Wheel Boss)	1	Detail : Page 35 ~
7	0244-74400	Rear Tire (L) Assy (17×8.00-8)(Include Wheel Boss)	1	Detail : Page 35 ~
8	0244-83200	Mini Hexagonal Bolt (PWSW) M10*25 (7T Lock)	4	
9	0322-0150H	Transmission Hunger Stay CMP (Metallic Grey)	1	
10	83-1630-335-00	Washer 16*40*4.5	2	
11	89-1211-080352	Mini Hexagonal Bolt M8*35	1	
12	89-1561-080002	Mini Hexagonal U Nut M8	1	
13	89-1631-080042	Flange Mini Hexagonal Nut M8	3	
14	89-1658-160042	Low Fluted Nut (2 sorts) M16	2	
15	89-1750-080002	Spring Washer 8	1	
16	89-1750-160002	Spring Washer 16	2	
17	89-2120-350352	Split Pin 3.5*35	2	
18	89-2150-070500	Key 7*50 (round)	2	

17/55 Transmission & HST 2/9

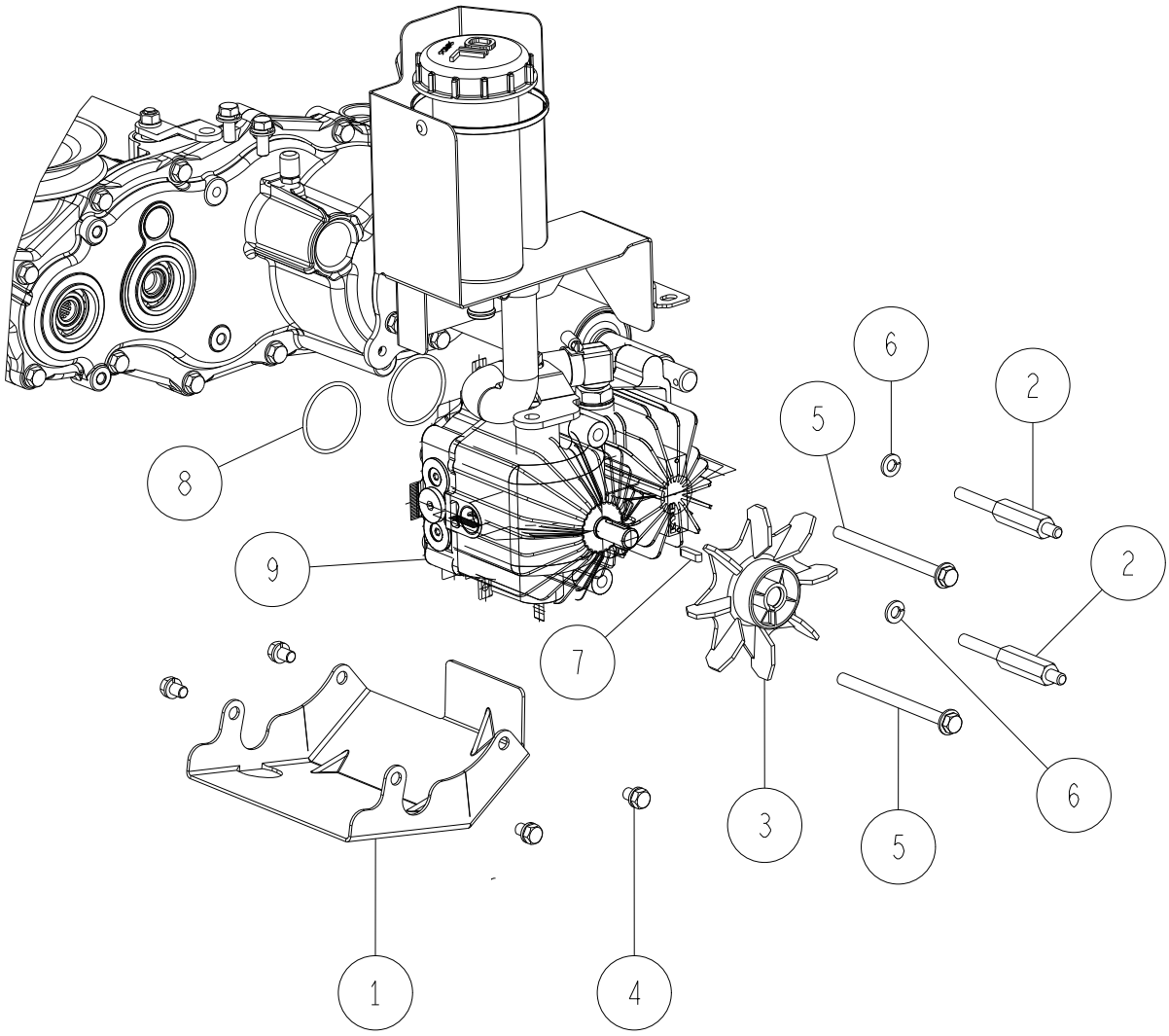

Ref.	Parts Number	Parts Name	Quantity	Remarks
1	0207-0310H	Transmission Guard (Metallic Grey)	1	
2	0207-07300	Double Spring Bolt	2	
3	0207-07500	Fan	1	
4	89-1232-080122	Mini Hexagonal Bolt (SW) M8*12	4	
5	89-1251-081123	Flange Mini Hexagonal Bolt M8*112	2	
6	89-1750-080002	Spring Washer 8	2	
7	89-2150-050200	Key 5*20 (round)	1	
8	89-5222-045000	O Ring G45	2	
9	0348-09200	HST Unit (KYB)Assy (RM982)	1	Detail : Page 24

18/55 Transmission & HST 3/9

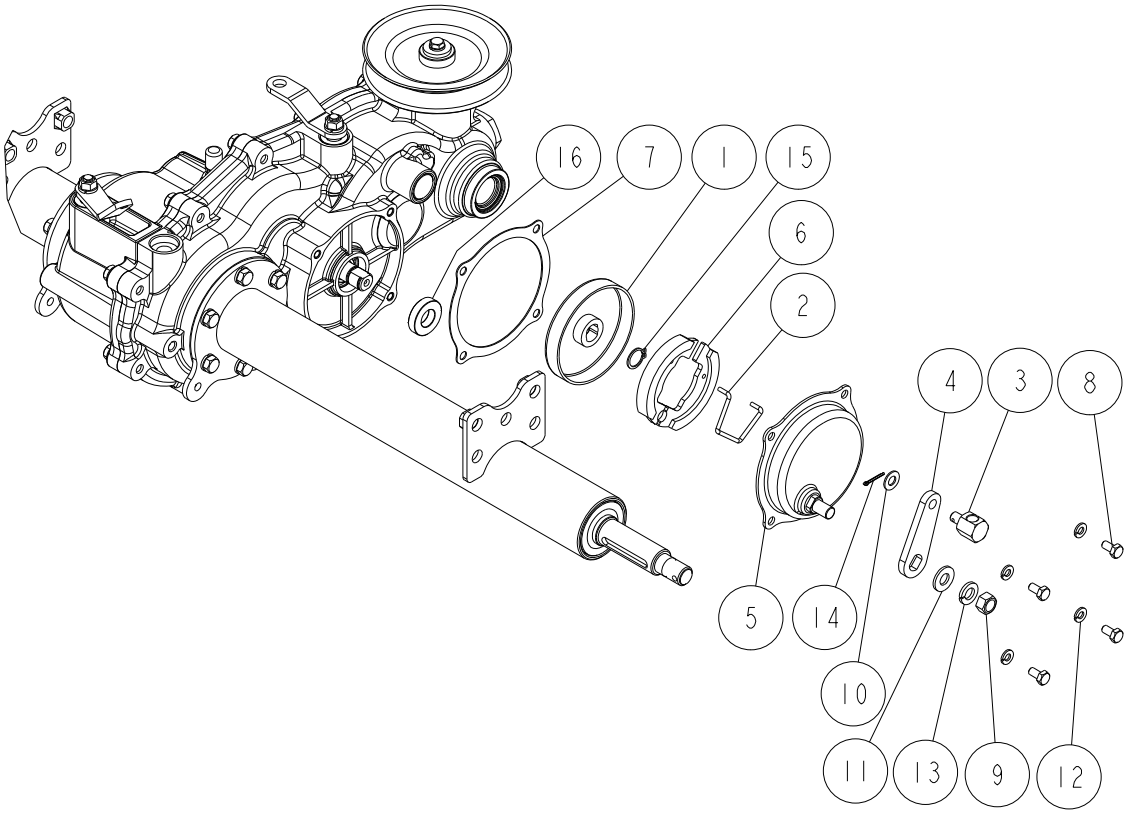

Ref.	Parts Number	Parts Name	Quantity	Remarks
-	0207-73000	Brake Assy(with packing)	1	Include : 1,2,4,5,6,7,9,11,13
-	0207-73100	Brake Assy(without packing)	1	Include : 1,2,4,5,6,9,11,13
-	0207-73200	Brake Cap Assy	1	Include : 2,4,5,6,9,11,13
1	80-1030-282-00	Brake Drum (PA-7)	1	
2	80-1030-285-00	Spring for Brake Shoe Return	1	
3	0207-10300	Brake Joint	1	
4	-	-	1	
5	-	-	1	
6	0244-88100	Brake Shoe Set (PA-7)	1	
7	0308-00300	Brake Cover PK (PA-7)	1	
8	89-1113-060122	Hexagonal Bolt (8T) M6*12	4	
9	89-1611-100042	Mini Hexagonal Nut M10	1	
10	89-1711-080002	Flat Washer 8	1	
11	89-1712-100000	Flat Washer 10	1	
12	89-1750-060002	Spring Washer 6	4	
13	89-1750-100002	Spring Washer 10	1	
14	89-2120-200152	Split Pin 2*15	1	
15	89-2511-000150	Snap Ring (S15)	1	
16	89-5125-153007	Oil Seal UE 15.30.07F	1	

19/55 Transmission & HST 4/9

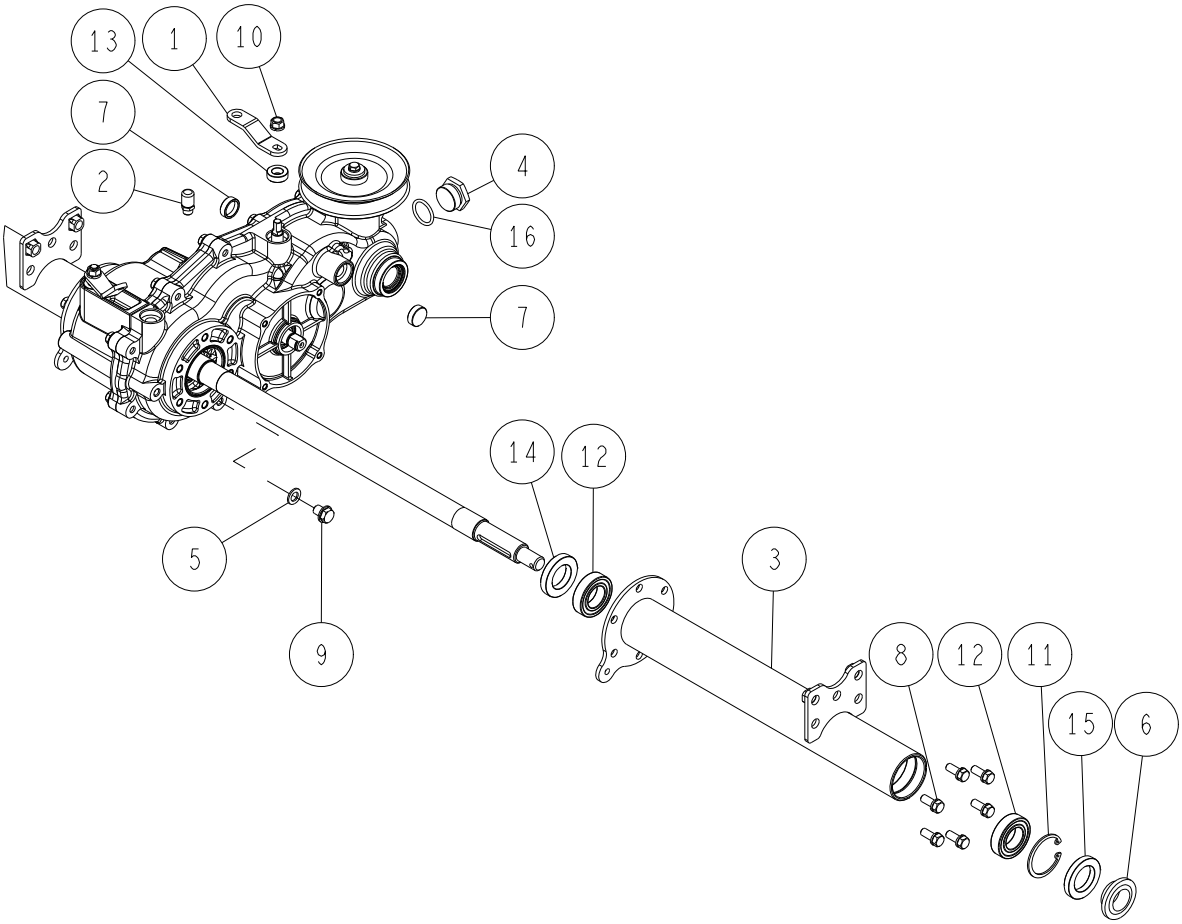

Ref.	Parts Number	Parts Name	Quantity	Remarks
-	0289-01000	Oil Plug Assy (with O Ring)	1	Include : 4,16
-	0244-08000	Oil Seal 25.47.15(with DP)	1	Include : 6,15
1	0207-02500	Sub Change Arm	1	
2	0207-06100	Air Bleezer	1	
3	0244-0110H	Axle Case (L) CMP (Metallic Grey)	1	
4	0289-01100	Oil Plug Assy (without O Ring)	1	
5	83-1020-349-00	Copper Packing 10.5*18*1.6	1	
6	83-1415-663-00	Oil Seal DP 25.30.15	1	
7	83-1415-671-00	Blind Cover 22	2	
8	89-1232-080202	Mini Hexagonal Bolt (SW) M8*20	6	
9	89-1252-100122	Flange Mini Hexagonal Bolt M10*12 (slender)	1	
10	89-1543-080002	Mini Hexagonal Nut (SW) M8	1	
11	89-2512-000470	Snap Ring (R47)	1	
12	89-3115-060054	Bearing 6005 2RS	2	
13	89-5121-122207	Oil Seal UE 12.22.7	1	
14	89-5121-284708	Oil Seal UE 28.47.8	1	
15	89-5121-304707	Oil Seal UE 30.47.7	1	
16	89-5221-024000	O Ring P24	1	

20/55 Transmission & HST 5/9

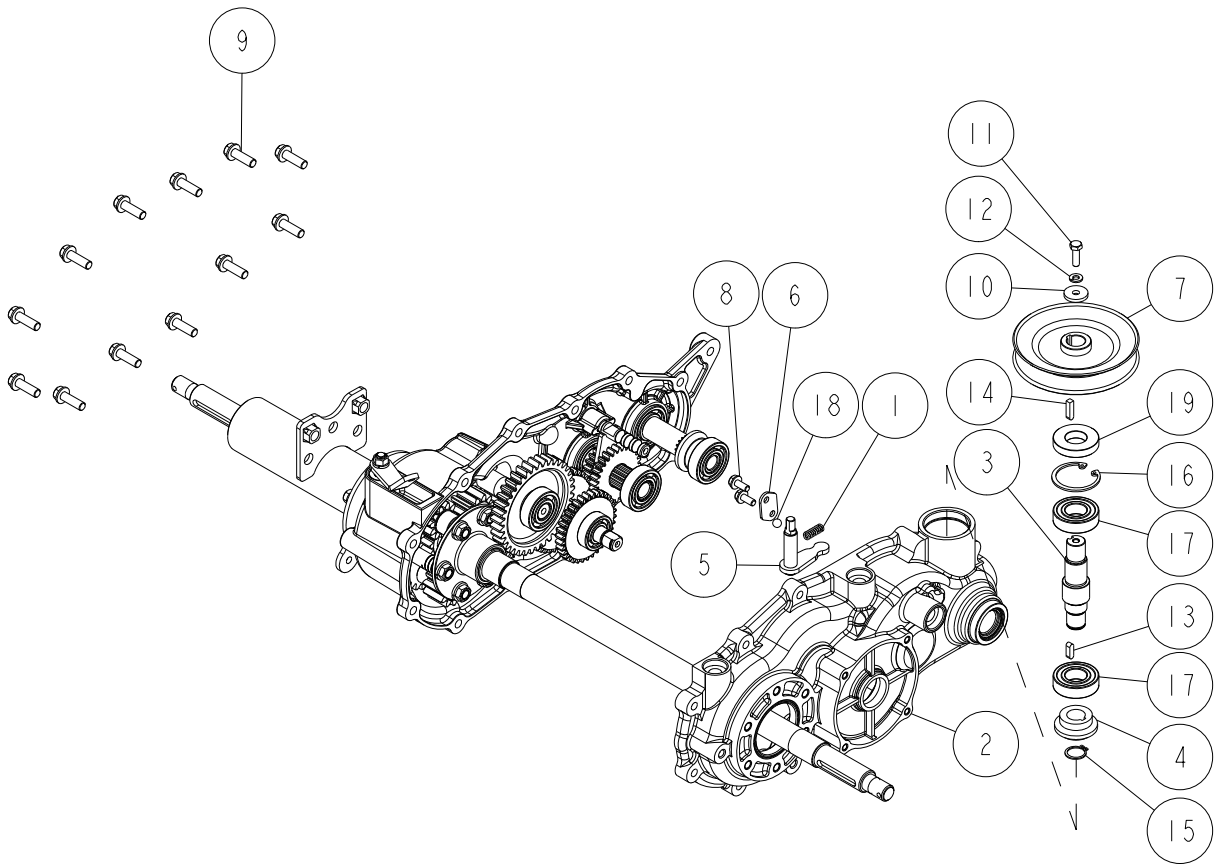

Ref.	Parts Number	Parts Name	Quantity	Remarks
1	80-1310-138-00	Spring 1.4	1	
2	0207-00100	Transmission Case(L)	1	
3	0207-00300	A Axle	1	
4	0207-00400	20T Spiral Mita Gear(L)	1	
5	0207-01700	Swing Arm CMP	1	
6	0207-01900	Shift Spring Holder	1	
7	0284-4020H	Transmission Pulley(HI) (Metallic Grey)	1	
8	83-1020-148-00	Tapping Bolt M6*14	2	
9	83-1482-143-00	Tapping Bolt M8*25	12	
10	83-1482-311-00	Washer 6.5*22*3.2	1	
11	89-1113-060202	Hexagonal Bolt (8T) M6*20	1	
12	89-1750-060002	Spring Washer 6	1	
13	89-2150-050160	Key 5*16 (round)	1	
14	89-2151-050200	Key 5*20 (half round)	1	
15	89-2511-000170	Snap Ring (S17)	1	
16	89-2512-000420	Snap Ring (R42)	1	
17	89-3115-060044	Bearing 6004 2RS	2	
18	89-3410-080000	Steel Ball 8.0	1	
19	89-5121-204208	Oil Seal UE 20.42.8	1	

21/55 Transmission & HST 6/9

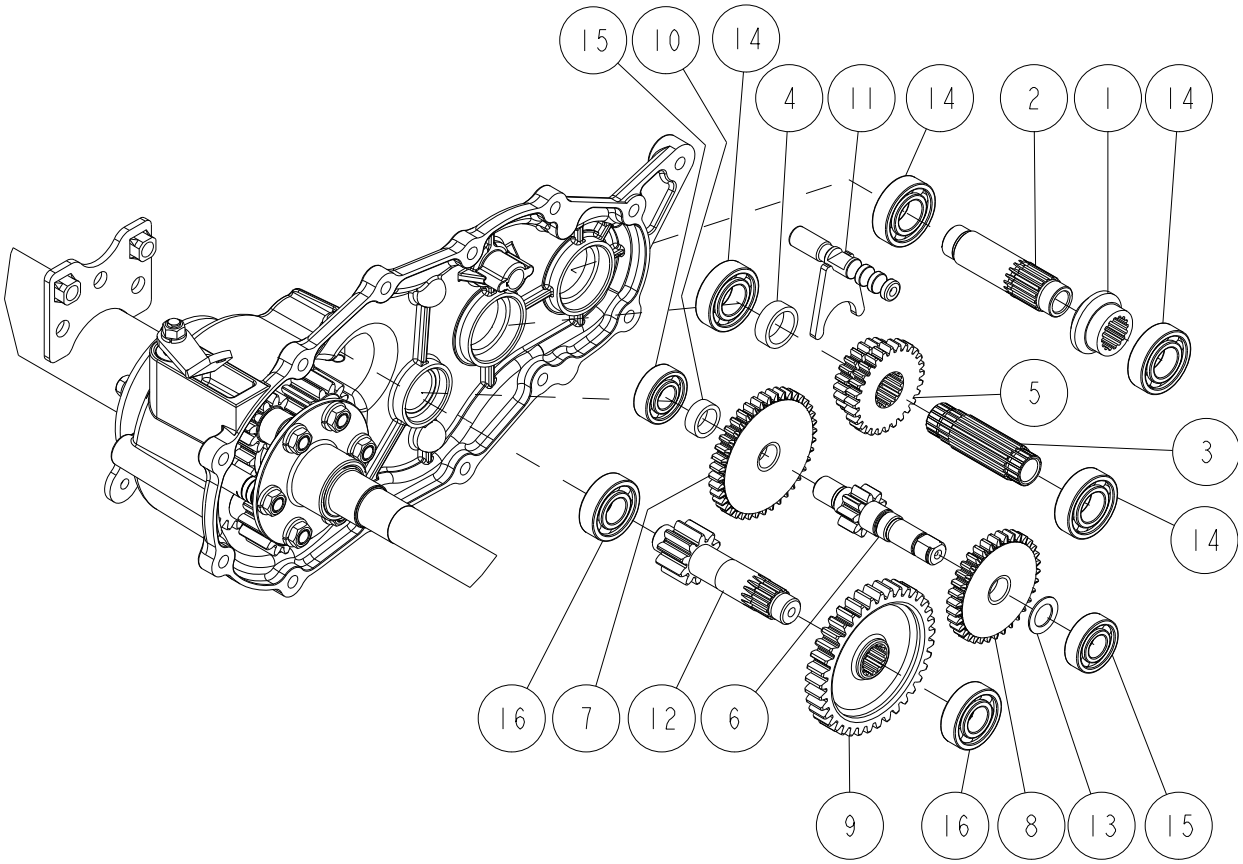

Ref.	Parts Number	Parts Name	Quantity	Remarks
1	0207-00500	20T Spiral Mita Gear(R)	1	
2	0207-00600	B Axle	1	
3	0207-00700	C Axle	1	
4	0207-00800	C Axle Collar 9	1	
5	0207-00910	Shift Gear 22-28	1	
6	0207-01100	Brake Shaft	1	
7	0207-01210	Brake Shaft 40T Gear	1	
8	0207-01310	Brake Shaft 34T Gear	1	
9	0207-01400	D Axle 37T Gear	1	
10	0207-01500	Brake Shaft Collar 8	1	
11	0207-01600	Shift Fork Shaft CMP	1	
12	0244-00400	D Axle	1	
13	83-1020-361-00	Thrust Washer 15*24*1.0	1	
14	89-3111-060044	Bearing 6004	4	
15	89-3111-062024	Bearing 6202	2	
16	89-3111-062034	Bearing 6203	2	

22/55 Transmission & HST 7/9

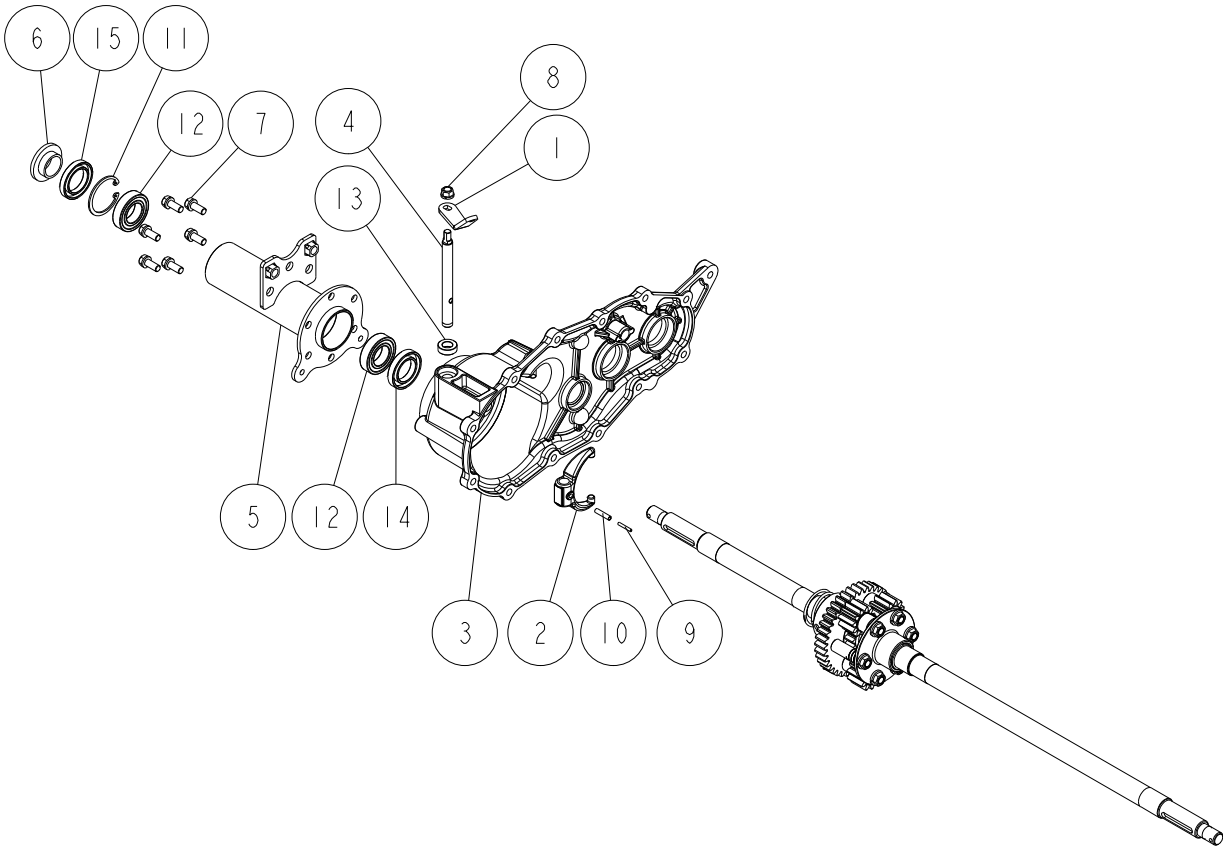

Ref.	Parts Number	Parts Name	Quantity	Remarks
-	0244-08000	Oil Seal 25.47.15(with DP)	1	Include : 6,15
1	80-1488-153-00	Differential Lock Arm	1	
2	80-1830-113-00	Differential Lock Fork	1	
3	0207-00200	Transmission Case(R)	1	
4	0207-01800	Differential Lock Fork Shaft	1	
5	0244-0120H	Axle Case (R) CMP (Metallic Grey)	1	
6	83-1415-663-00	Oil Seal DP 25.30.15	1	
7	89-1232-080202	Mini Hexagonal Bolt (SW) M8*20	6	
8	89-1543-080002	Mini Hexagonal Nut (SW) M8	1	
9	89-2111-030020	Spring Pin 3*20	1	
10	89-2111-050022	Spring Pin 5*22	1	
11	89-2512-000470	Snap Ring (R47)	1	
12	89-3115-060054	Bearing 6005 2RS	2	
13	89-5121-122207	Oil Seal UE 12.22.7	1	
14	89-5121-284708	Oil Seal UE 28.47.8	1	
15	89-5121-304707	Oil Seal UE 30.47.7	1	

23/55 Transmission & HST 8/9

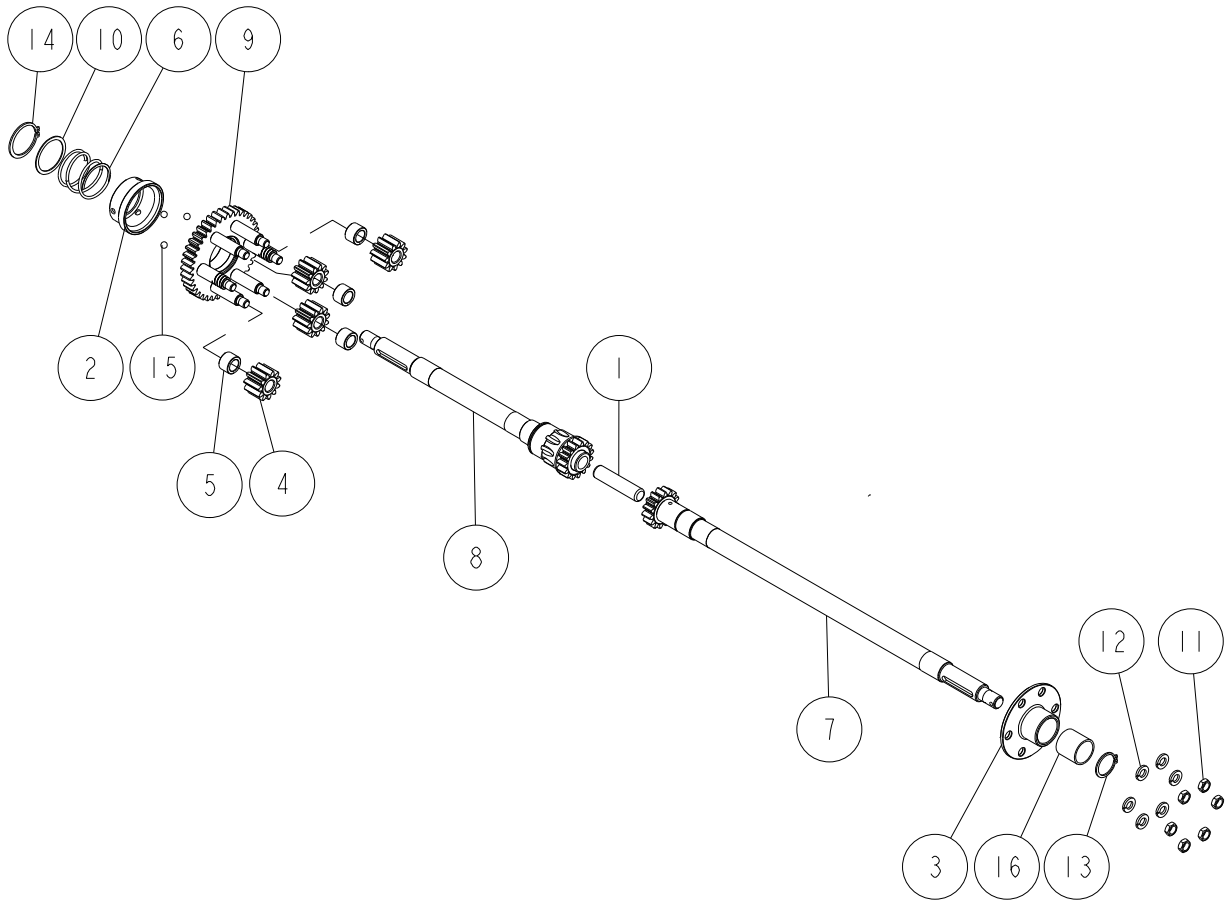

Ref.	Parts Number	Parts Name	Quantity	Remarks
1	80-1415-150-00	Axle Pin	1	
2	80-1425-143-00	Differential Lock Cone	1	
3	80-1481-151-00	Differential Lock Plate	1	
4	80-1481-152-00	Differential Lock Gear 11T	4	
5	80-1481-155-00	Differential Gear Shaft Collar	4	
6	80-1751-162-00	Differential Lock Spring	1	
7	0207-02120	Axle(L) CMP	1	
8	0207-02220	Axle(R) CMP	1	
9	0244-00300	Axle Gear 39T CMP	1	
10	83-1830-382-00	Thrust Washer 40*48*1.0	1	
11	89-1613-100042	Mini Hexagonal Nut (3 sorts) M10	6	
12	89-1750-100002	Spring Washer 10	6	
13	89-2511-000280	Snap Ring (S28)	1	
14	89-2511-000400	Snap Ring (S40)	1	
15	89-3410-075000	Steel Ball 7.5	3	
16	89-3510-028300	DU Bush 28.30	1	

24/55 Transmission & HST 9/9

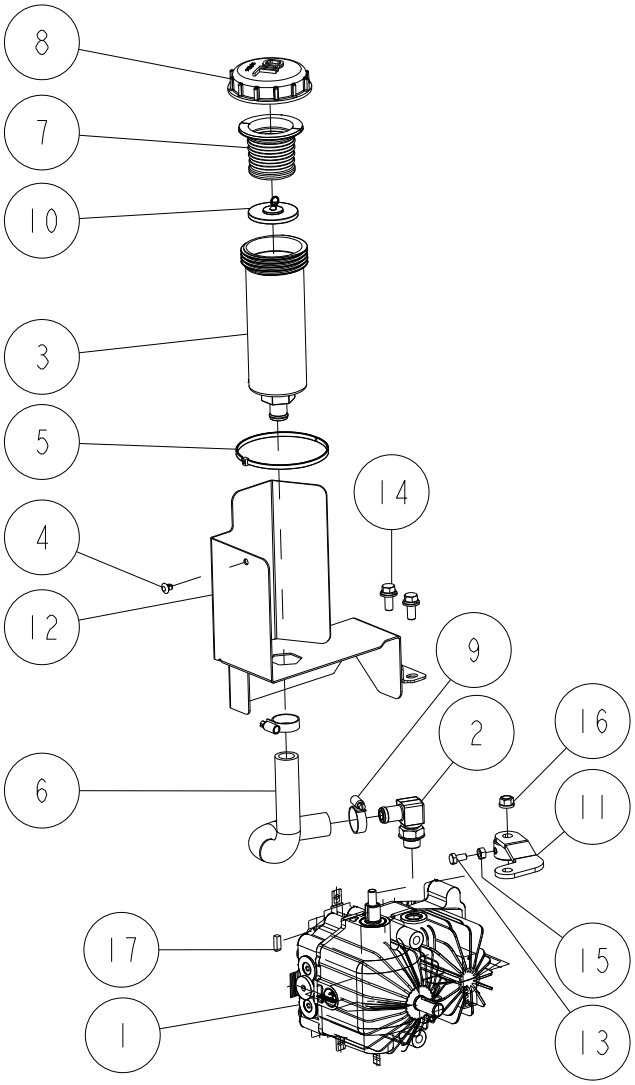

Ref.	Parts Number	Parts Name	Quantity	Remarks
-	0348-09200	HST Unit (KYB)Assy (RM982)	1	Include : 1~17(without 14)
-	0322-01600	HST Oil Tank Assy (Black Cap)	1	Include : 3,7,8
1	-	HST Unit	1	
2	0207-07700	Port Joint	1	
3	0207-08610	HST Oil Tank (without Tank Cap)	1	
4	0207-79800	Push Clip	1	
5	0207-79900	Wire Band 250L	1	
6	0244-72700	HST Oil Hose	1	
7	0289-71200	Waterproof Packing	1	
8	0312-01800	HST Oil Tank Cap (Black)	1	
9	0312-74400	Hose Band 16-25	2	
10	0322-71600	Moisture Adsorption Sheet	1	
11	0348-0010H	Control Arm CMP (Metallic Grey)	1	
12	0348-00201	HST Oil Tank Stay CMP (White)	1	
13	89-1113-060122	Hexagonal Bolt (8T) M6*12	1	
14	89-1233-080202	Mini Hexagonal Bolt (PWSW) M8*20	2	
15	89-1511-060042	Hexagonal Nut M6	1	
16	89-1543-080002	Mini Hexagonal Nut (SW) M8	1	
17	89-2151-050160	Key 5*16 (half round)	1	

25/55 Handle 1/4

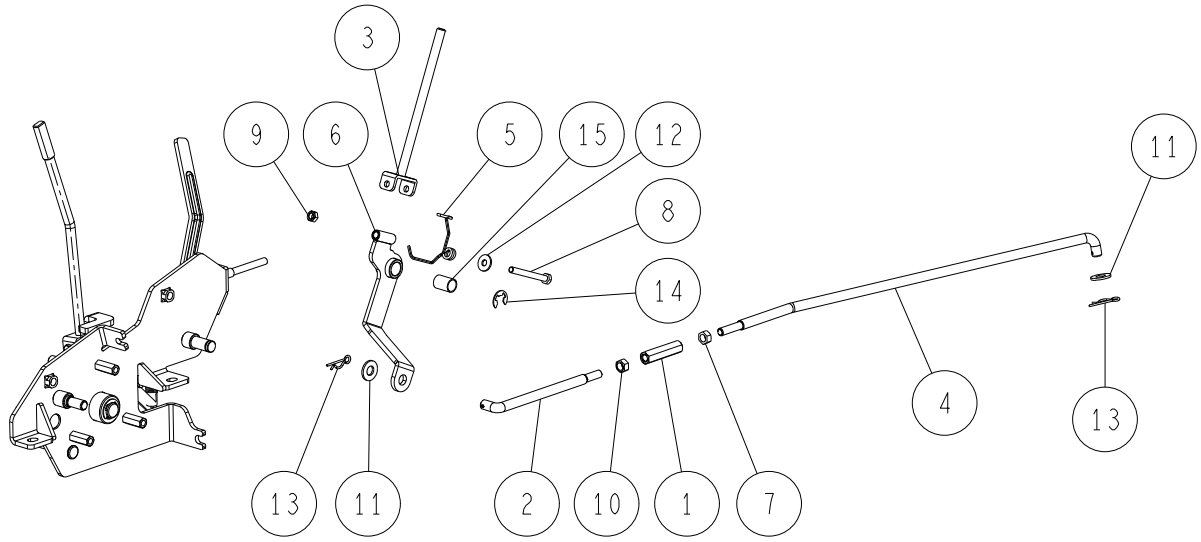

Ref.	Parts Number	Parts Name	Quantity	Remarks
-	0262-70100	Steering Wheel Assy	1	Include : 2,3,4
1	0207-79200	Fuse Box Bracket	1	
2	0262-70300	Sub Handle Assy	1	
3	0262-70400	Steering Wheel	1	
4	0262-70500	Steering Cap	1	
5	0312-11701	Handle Stay Cover Holder (White)	2	
6	0312-77900	Fuse Box Cover	1	Only Cover
7	0322-11500	Meter Panel Cover	1	
8	0322-73000	Magnet Switch Set	1	
9	89-1137-060152	Hexagonal Bolt (PW) M6*15	4	
10	89-1159-060108	Truss Mini Screw M6*10	4	
11	89-1531-060042	Flange Nut M6	4	
12	89-1561-100002	Mini Hexagonal U Nut M10	1	
13	89-1713-100002	Flat Washer 10 (large)	1	
14	89-1812-060002	Toothed washer (inside) 6	1	

26/55 Handle 2/4

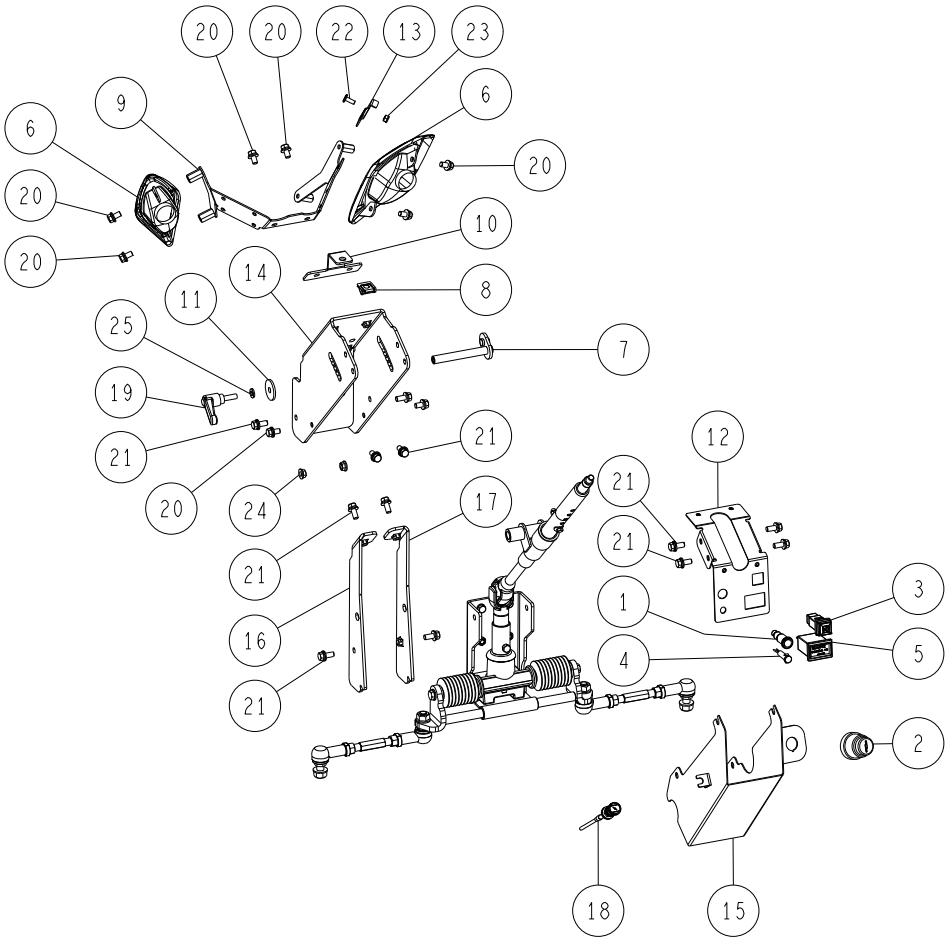

Ref.	Parts Number	Parts Name	Quantity	Remarks
1	0207-79300	Pilot Lamp	1	
2	0207-79700	Key Switch (NMA03-A020)	1	
3	0244-70300	Lighting Switch	1	
5	0267-70600	Hour Meter (Digital)	1	
6	0312-70200	Head Lamp	2	
7	0322-11100	Tilt Pin CMP	1	
8	0322-71100	Clip φ 6	1	
9	0347-14401	Head Lamp Stay CMP (White)	1	
10	0347-14501	Front Cover Stay (White)	1	
11	0348-10700	Flat Washer 9*35*3.2	1	
12	0341-1410G	Meter Panel CMP (Green)	1	
13	0348-14700	Fuse Box Bracket	1	
14	0348-15101	Handle Stay CMP(Long) (White)	1	
15	0348-15401	Harness Panel CMP (White)	1	
16	0348-15601	Reinforce for Handle (L) CMP (White)	1	
17	0348-15701	Reinforce for Handle (R) CMP (White)	1	
18	0348-70200	Choke Wire	1	
19	0348-71400	Cramp Lever	1	
20	89-1233-080162	Mini Hexagonal Bolt (PWSW) M8*16	8	
21	89-1233-080202	Mini Hexagonal Bolt (PWSW) M8*20	12	
22	89-1390-060162	Welded Bolt M6*16	1	
23	89-1541-060002	Hexagonal Nut (SW) M6	1	
24	89-1631-080042	Flange Mini Hexagonal Nut M8	2	
25	89-1750-080002	Spring Washer 8	1	

27/55 Handle 3/4

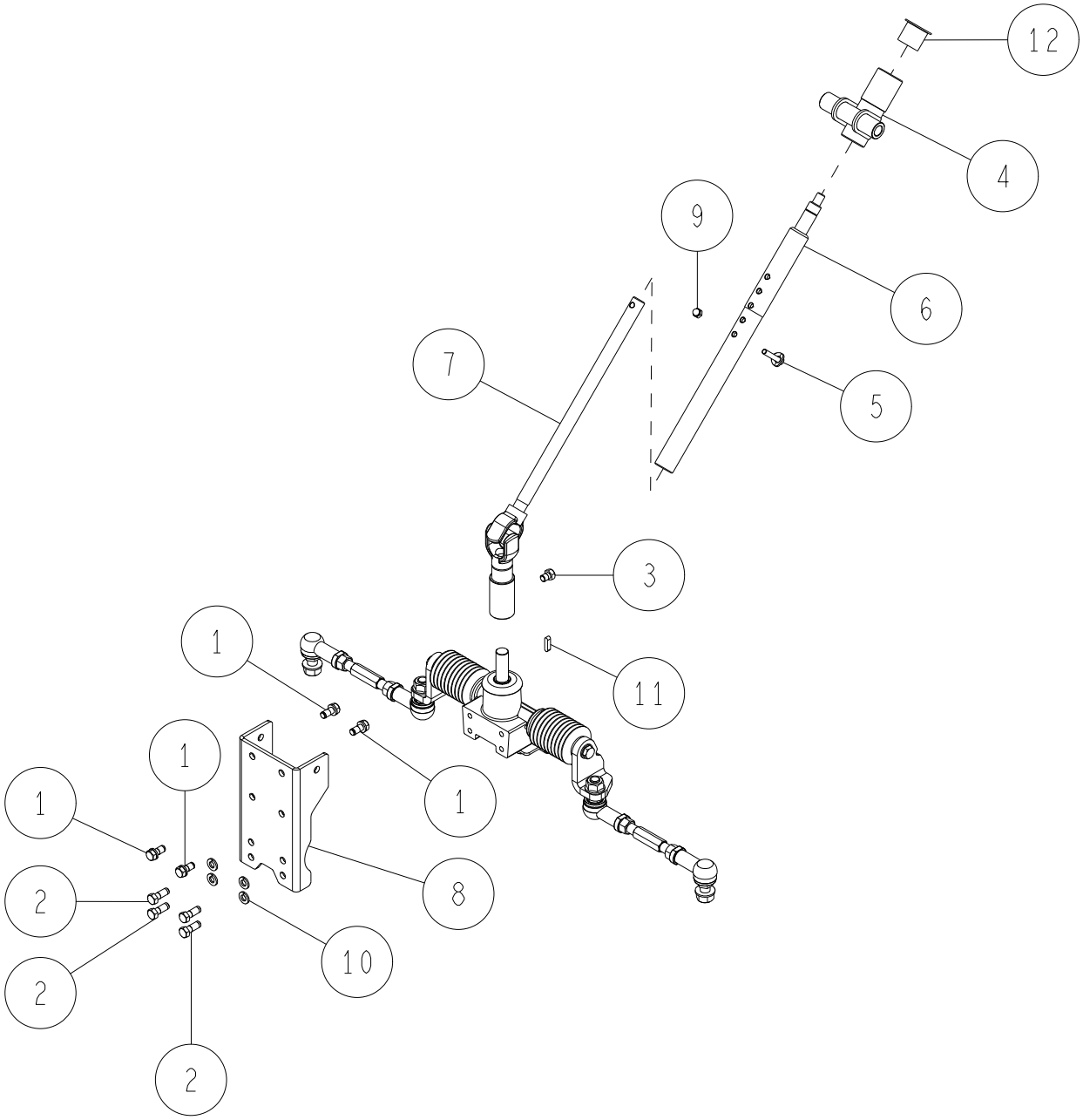

Ref.	Parts Number	Parts Name	Quantity	Remarks
1	0245-74300	Hexagonal Bolt(SW) M8*18 (Meck)	4	
2	0314-70100	Mini Hexagonal Bolt (Meck) M8*22	4	
3	0322-11600	Mini Hexagonal Bolt M8*10 (Meck)	1	
4	0348-14311	Handle Support CMP (White)	1	
5	0348-14600	Bolt for Upper Shaft Setting	1	
6	0348-15200	Steering Upper Shaft CMP(Long)	1	
7	0348-15300	Steering Joint Shaft CMP(Long)	1	
8	0348-1550H	Steering Gear Box Bracket CMP (Metallic Grey)	1	
9	89-1553-060002	Bag Hexagonal U Nut M6	1	
10	89-1750-080002	Spring Washer 8	4	
11	89-2150-050200	Key 5*20 (round)	1	
12	89-3511-025250	DU Bush 25.25.36F	1	

28/55 Handle 4/4

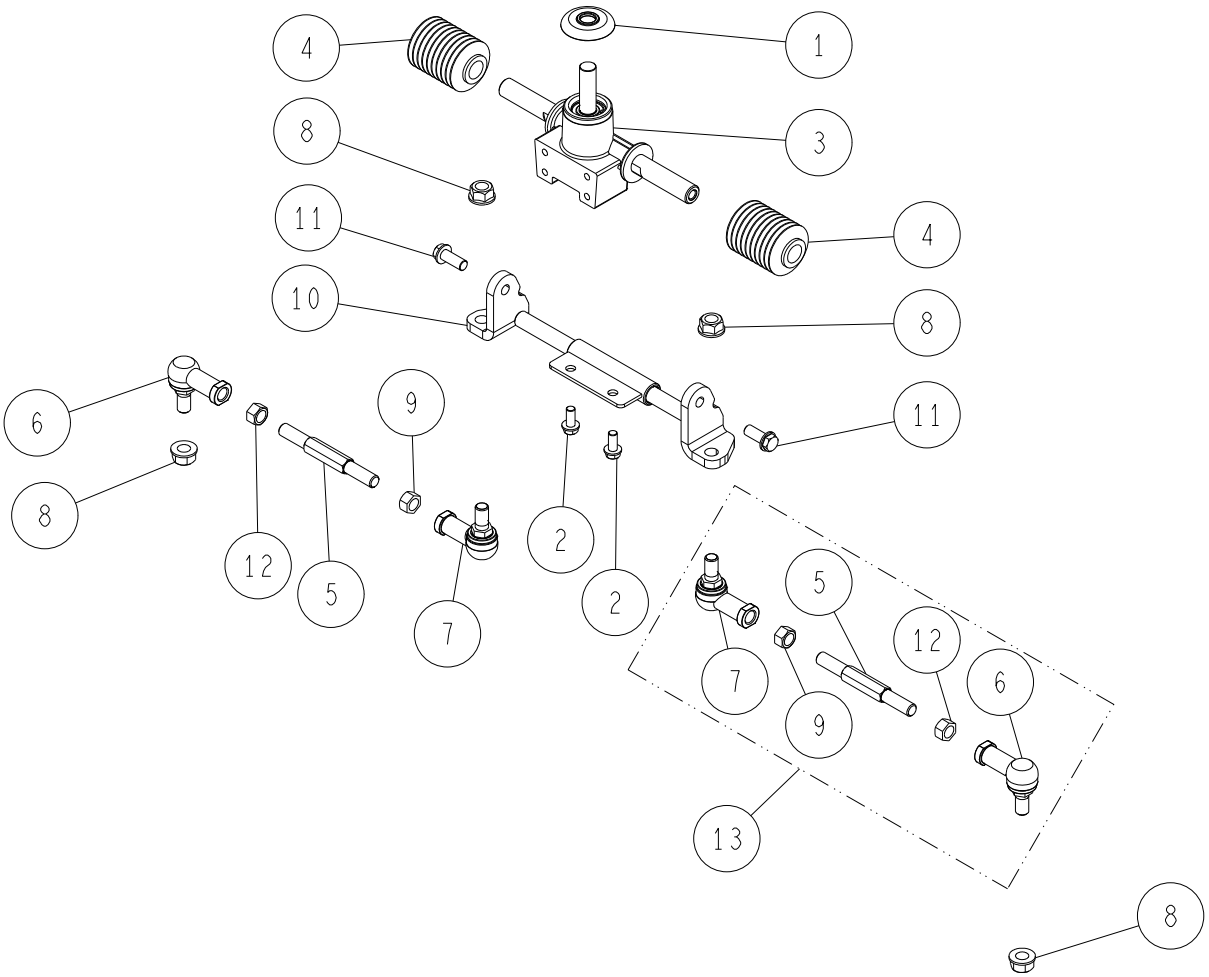

Ref.	Parts Number	Parts Name	Quantity	Remarks
1	80-1016-461-00	Bearing Cover	1	
2	80-1020-719-00	Hexagonal Tap Tight M8*18	2	
3	80-1484-962-10	Steering Gear Box Assy	1	
4	80-1490-967-00	Steering Boots	2	
5	0244-31300	Tie Rod Adjuster	2	
6	0244-71700	Link Ball 12 (R)	2	
7	0244-71800	Link Ball 12 (L)	2	
8	0244-71900	Tough Lock Nut M12=P1.25	4	
9	0244-73800	Hexagonal Nut (slender) M12 Left	2	
10	0348-1450H	Rack Support CMP (Metallic Grey)	1	
11	89-1254-100252	Flange Mini Hexagonal Bolt M10*25 P=1.25	2	
12	89-1612-120042	Mini Hexagonal Nut (Slender) M12	2	
13	0244-31000	Tie Rod Adjuster Assy	2	Include : 5,6,7,9,12

29/55 Front 1/6

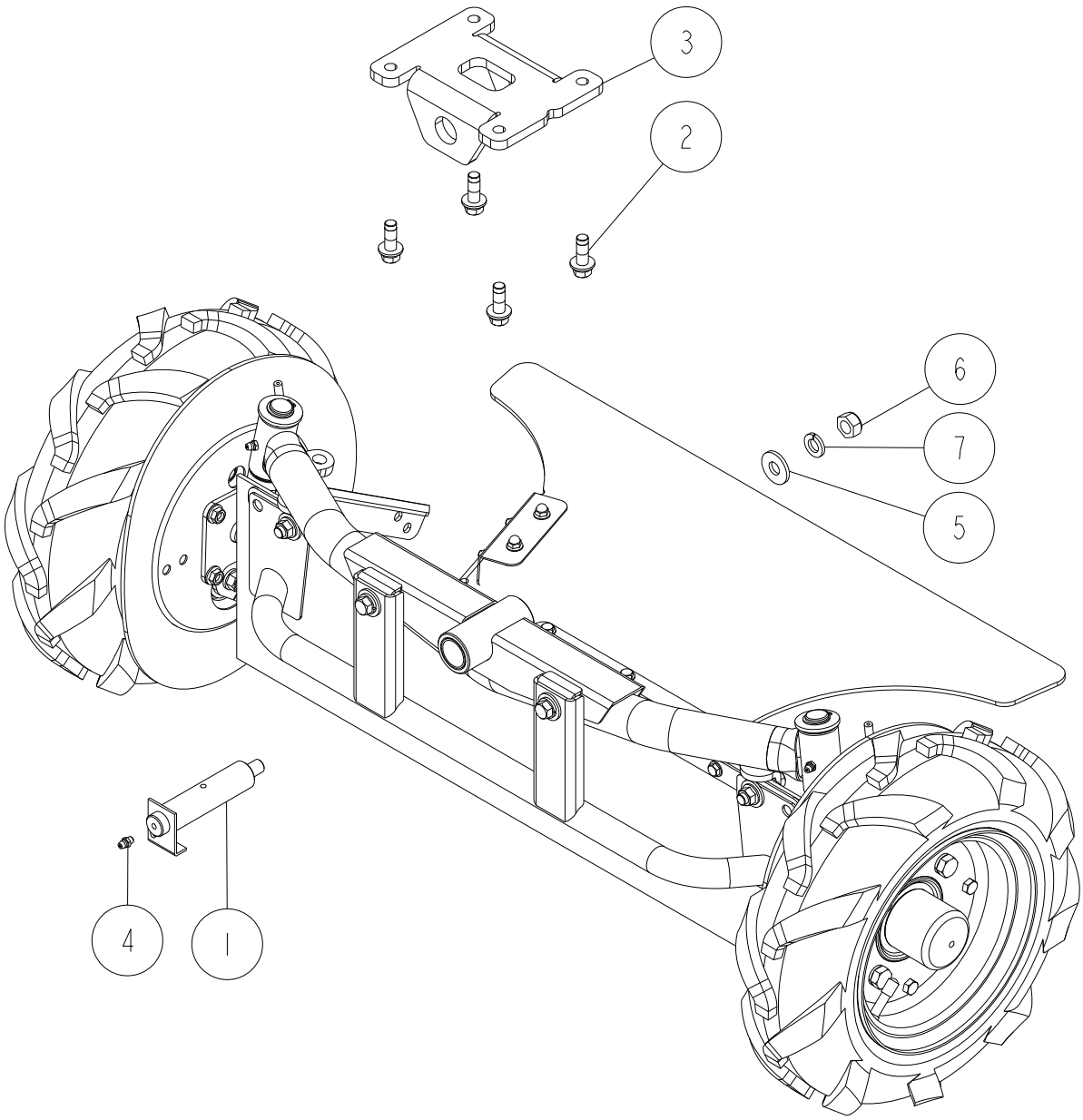

Ref.	Parts Number	Parts Name	Quantity	Remarks
1	0207-30700	Center Pin	1	
2	0312-74300	Hexagonal Bolt (7T-SW.PW) M10*30 (Meck)	4	
3	0322-3030H	Front Axle Holder (881) (Metallic Grey)	1	
4	83-1415-975-00	Grease Nipple M6	1	
5	83-1481-328-00	Washer 12*30*3.2	1	
6	89-1551-120002	Hexagonal U Nut M12	1	
7	89-1750-120002	Spring Washer 12	1	

30/55 Front 2/6

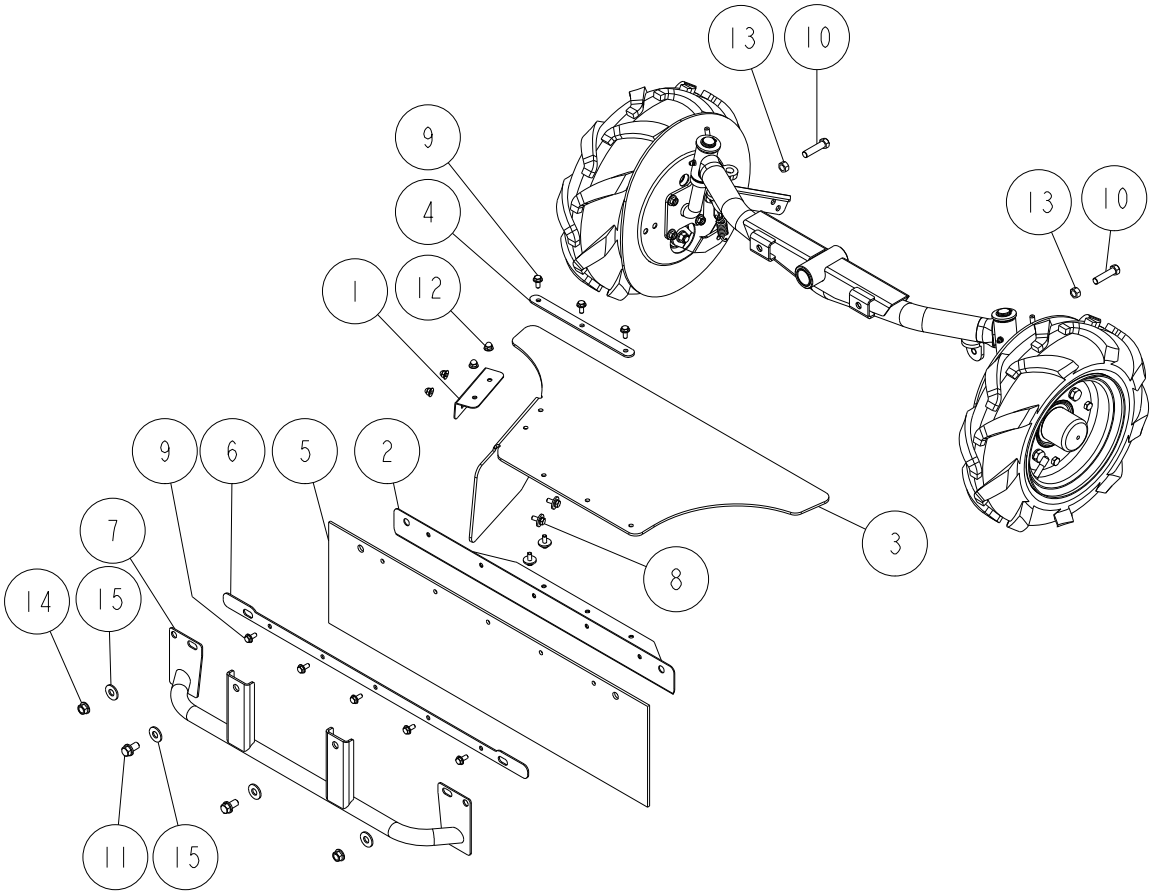

Ref.	Parts Number	Parts Name	Quantity	Remarks
1	0244-62200	Upper Flapper Holder (R)	1	
2	0312-3310H	Front Upper Guard CMP (Metallic Grey)	1	
3	0312-33200	Upper Flapper	1	
4	0312-3330H	Upper Flapper Holder (Metallic Grey)	1	
5	0312-33400	Front Flapper	1	
6	0329-8380H	Front Flapper Holder (RMK150) (Metallic Grey)	1	
7	0329-8390H	Foot Guard CMP (RMK150) (Metallic Grey)	1	
8	83-1565-111-00	Hexagonal Bolt (with Big Washer) M6*16	4	
9	89-1137-060152	Hexagonal Bolt (PW) M6*15	8	
10	89-1213-100407	Mini Hexagonal Bolt (8T)M10*40	2	
11	89-1232-100202	Mini Hexagonal Bolt (SW) M10*20	2	
12	89-1581-060042	Flange Cap Nut M6	4	
13	89-1611-100042	Mini Hexagonal Nut M10	2	
14	89-1631-100042	Flange Mini Hexagonal Nut M10	2	
15	89-1713-100002	Flat Washer 10 (large)	4	

31/55 Front 3/6

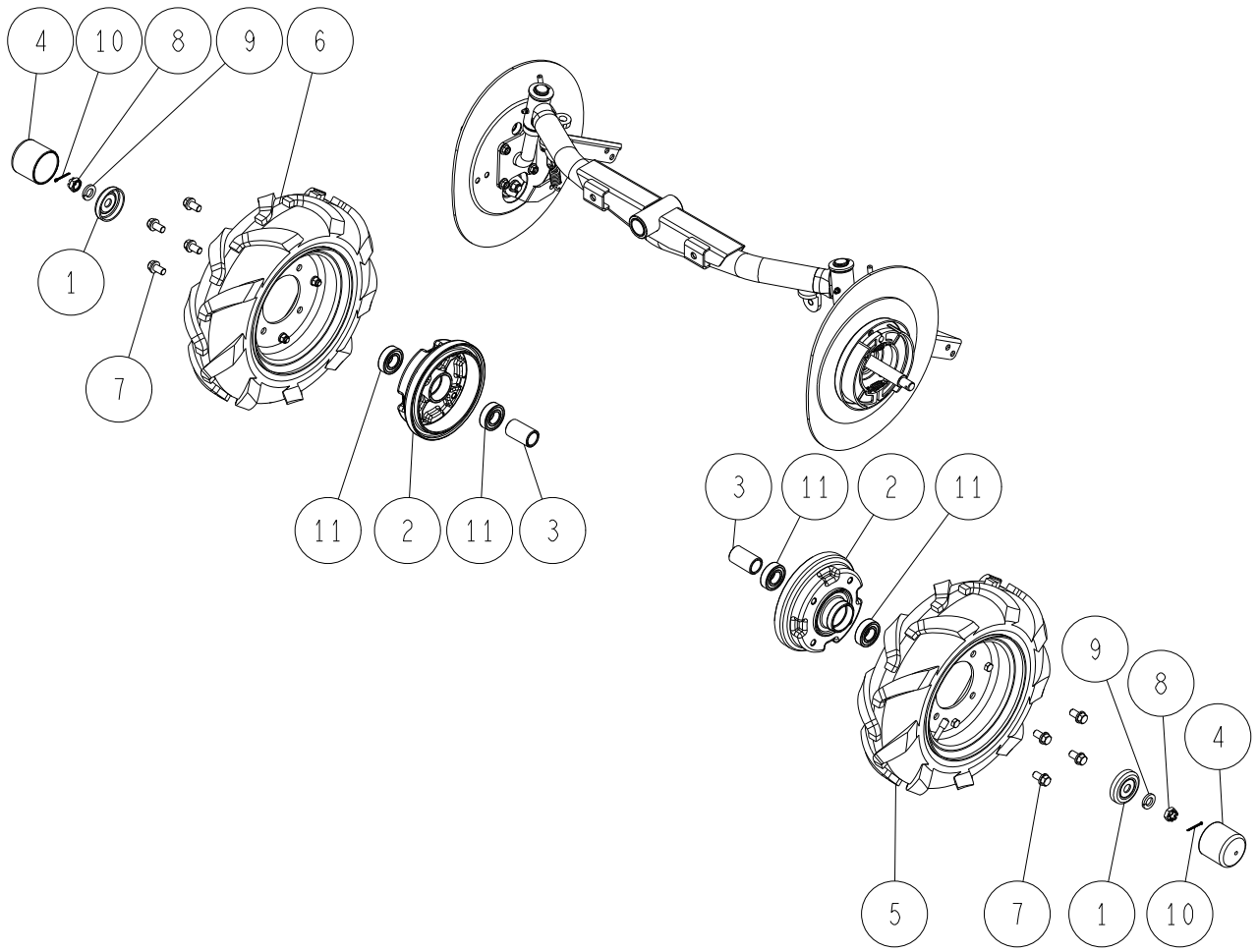

Ref.	Parts Number	Parts Name	Quantity	Remarks
1	0207-30500	Front Wheel Dust Cover	2	
2	0240-30301	Wheel Boss (White)	2	
3	0240-31100	King Pin Collar	2	
4	0244-76100	Wheel Cap (Front)	2	
5	0322-34000	Tire Assy (L) 3.50-7 (TA)	1	
6	0322-35000	Tire Assy (R) 3.50-7 (TA)	1	
7	89-1232-100202	Mini Hexagonal Bolt (SW) M10*20	8	
8	89-1668-140042	Mini Low Fluted Nut (2 sorts) M14	2	
9	89-1750-140002	Spring Washer 14	2	
10	89-2120-250252	Split Pin 2.5*25	2	
11	89-3115-060044	Bearing 6004 2RS	4	

32/55 Front 4/6

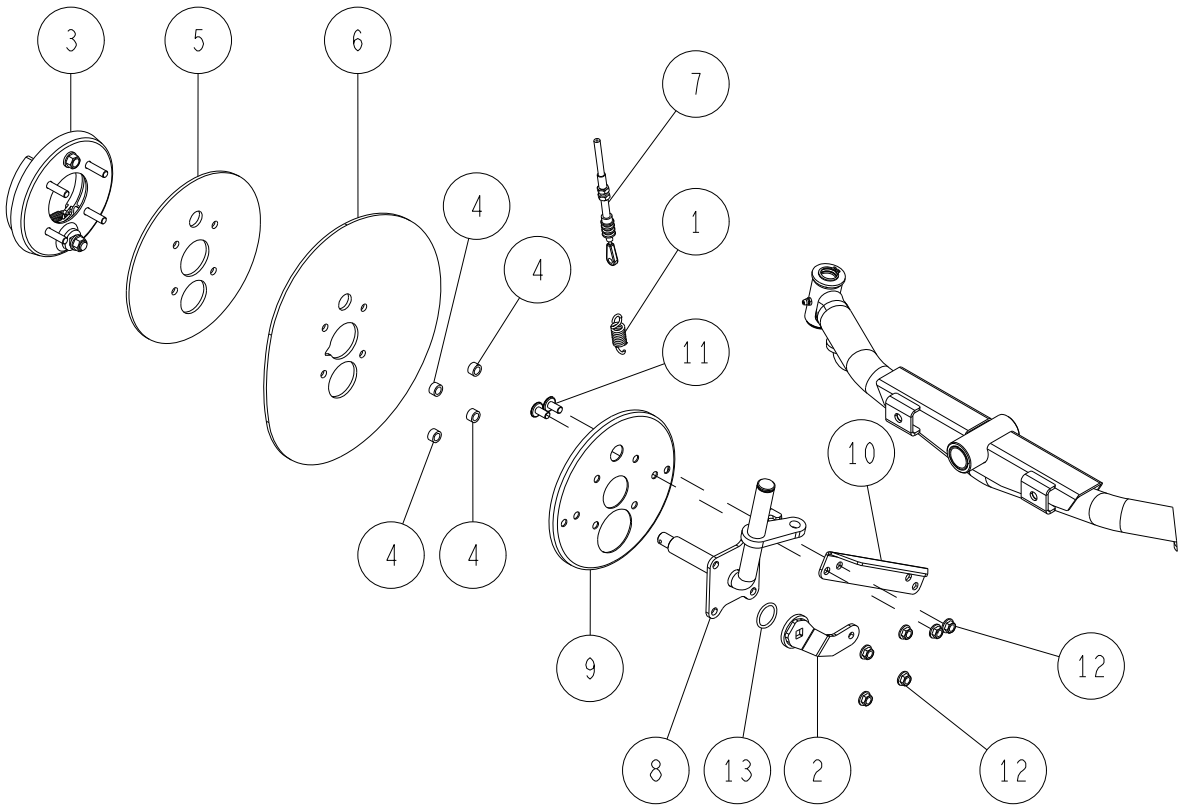

Ref.	Parts Number	Parts Name	Quantity	Remarks
1	80-1425-551-00	Differential Lock Spring	1	
2	0240-3130H	Brake Arm CMP (R) (Metallic Grey)	1	
3	0240-32100	Brake Shoe φ130	1	
4	0240-32200	Brake Collar	4	
5	0240-62110	Front Wheel Rubber Cover (IN)	1	
6	0240-62210	Front Wheel Rubber Cover	1	
7	0240-75110	Brake Wire	1	
8	0292-9410H	King Pin RM97FB (R) (Metallic Grey)	1	
9	0316-8310H	Brake Cover (RM83G FB) (Metallic Grey)	1	
10	0348-3050H	Foot Guard Stay (Metallic Grey)	1	
11	89-1390-080162	Welded Bolt M8*16	2	
12	89-1631-080042	Flange Mini Hexagonal Nut M8	6	
13	89-5221-025000	O Ring P25	1	

33/55 Front 5/6

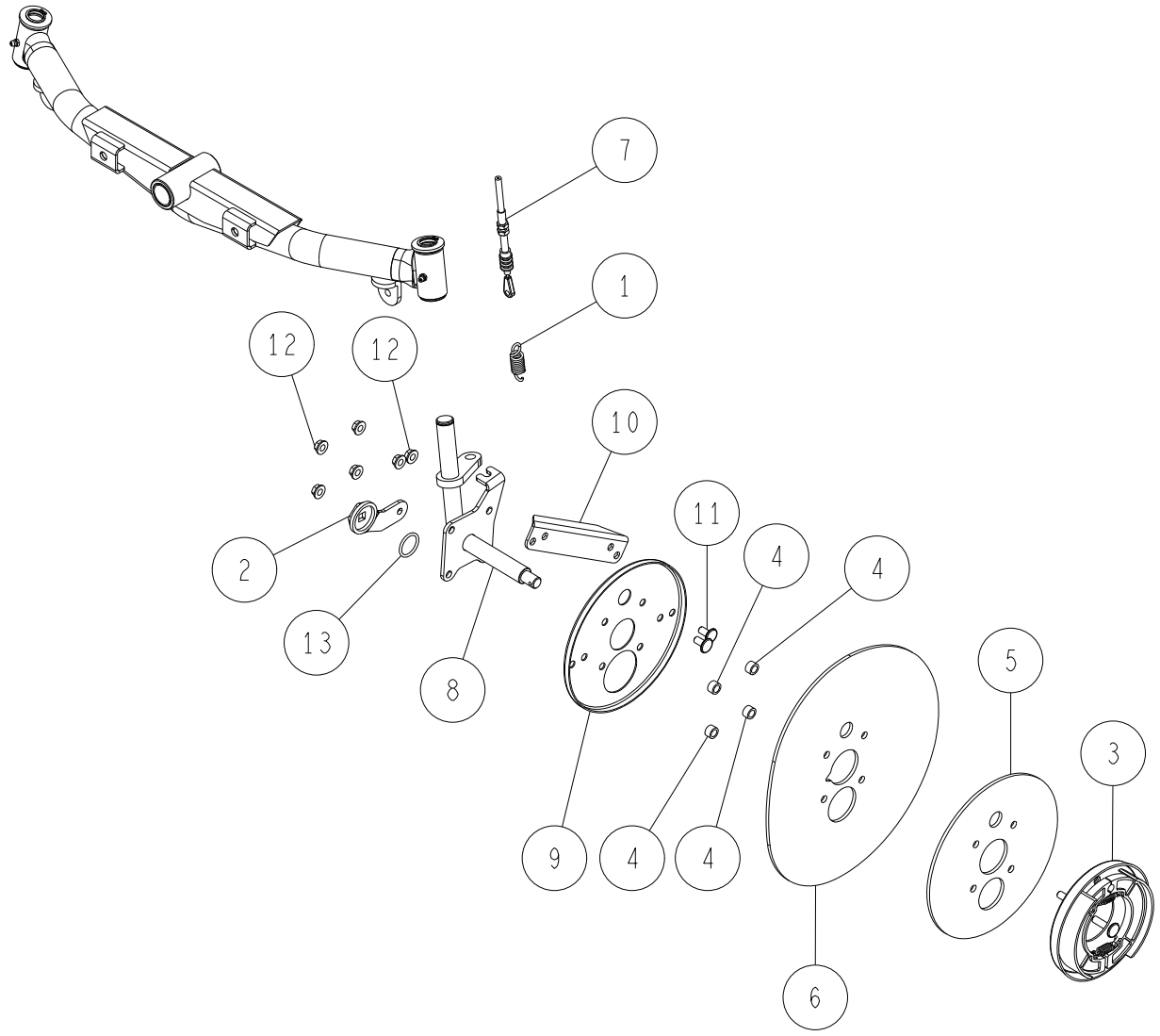

Ref.	Parts Number	Parts Name	Quantity	Remarks
1	80-1425-551-00	Differential Lock Spring	1	
2	0240-3120H	Brake Arm CMP (L) (Metallic Grey)	1	
3	0240-32100	Brake Shoe φ130	1	
4	0240-32200	Brake Collar	4	
5	0240-62110	Front Wheel Rubber Cover (IN)	1	
6	0240-62210	Front Wheel Rubber Cover	1	
7	0240-75110	Brake Wire	1	
8	0292-9420H	King Pin RM97FB (L) (Metallic Grey)	1	
9	0316-8310H	Brake Cover (RM83G FB) (Metallic Grey)	1	
10	0348-3050H	Foot Guard Stay (Metallic Grey)	1	
11	89-1390-080162	Welded Bolt M8*16	2	
12	89-1631-080042	Flange Mini Hexagonal Nut M8	6	
13	89-5221-025000	O Ring P25	1	

34/55 Front 6/6

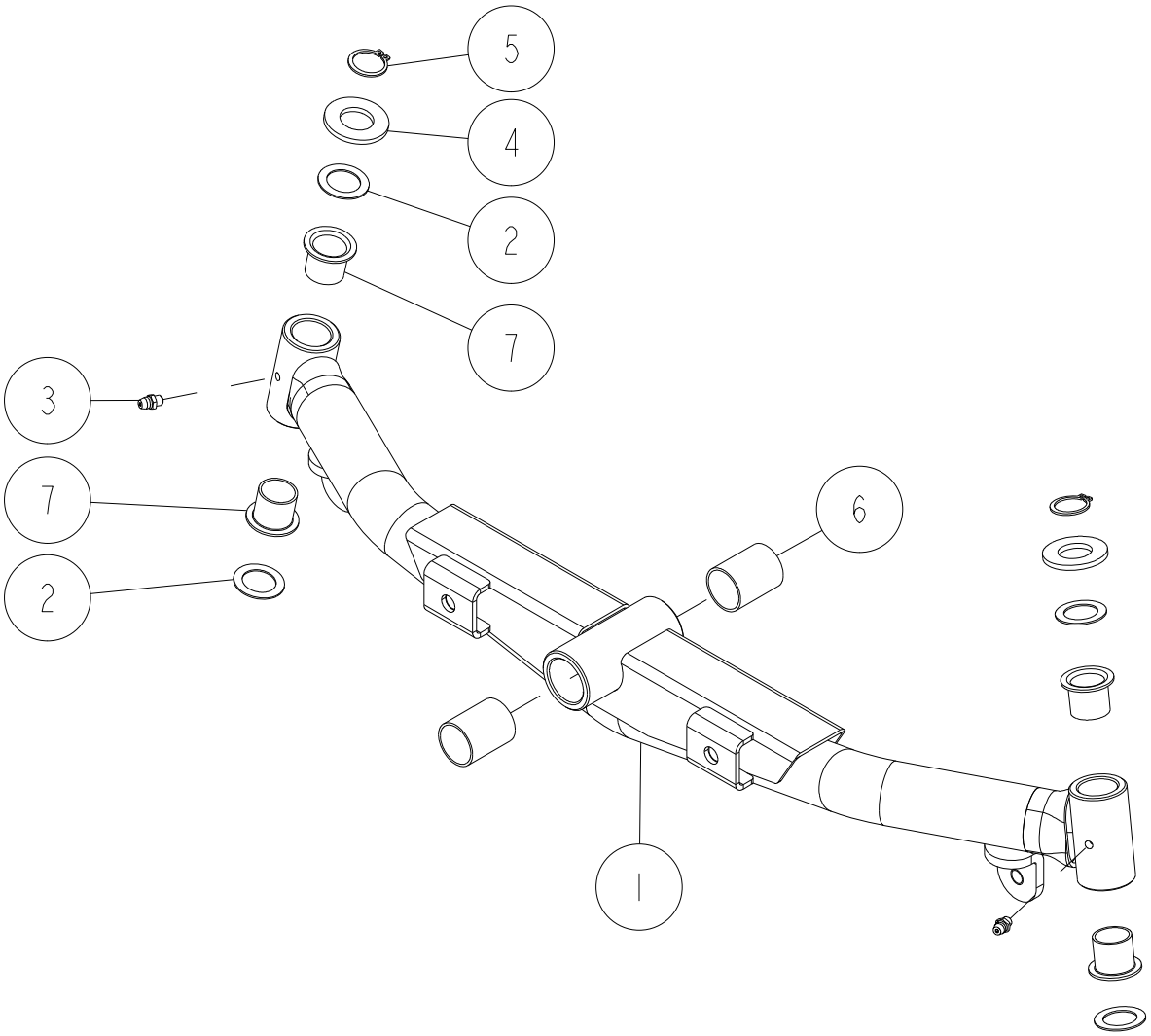

Ref.	Parts Number	Parts Name	Quantity	Remarks
1	0329-3210H	Front Axle CMP (RMK150) (Metallic Grey)	1	
2	83-1310-371-00	Thrust Washer 20*30*1.0	4	
3	83-1415-975-00	Grease Nipple M6	2	
4	83-1490-337-00	Washer 20*38*3.2	2	
5	89-2511-000200	Snap Ring (S20)	2	
6	89-3510-025350	DU Bush 25.35	2	
7	89-3511-020200	DU Bush 20.20.31F	4	

35/55 Tire 1/1

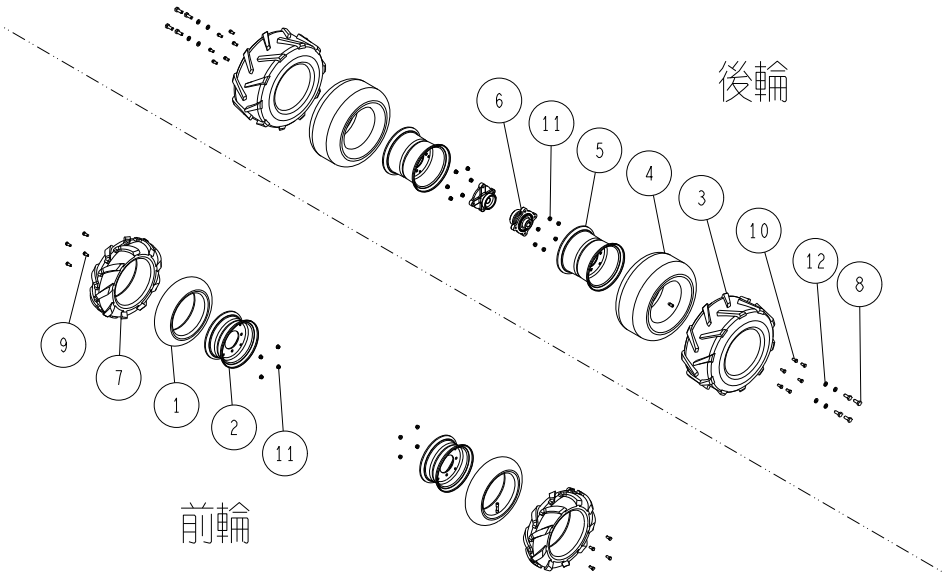

Ref.	Parts Number	Parts Name	Quantity	Remarks
1	80-1260-404-00	Tire Tube 3.50-7	2	
2	80-1260-407-00	Wheel Assy 3.50-7	2	
3	0244-78610	Tire 17*8.00-8	2	
4	0244-78300	Tire Tube 17*8.00-8	2	
5	0244-78800	Wheel Assy 17*800-8	4	
6	0207-31201	Rear Wheel Boss (White)	2	
7	0322-32100	Tire 3.50-7 (TA)	2	
8	89-1113-100252	Hexagonal Bolt (8T) M10*25	8	
9	89-1211-080162	Mini Hexagonal Bolt M8*16	8	
10	89-1213-080162	Mini Hexagonal Bolt (8T) M8*16	12	
11	89-1543-080002	Mini Hexagonal Nut (SW) M8	20	
12	89-1750-100002	Spring Washer 10	8	

36/55 Control 1/3

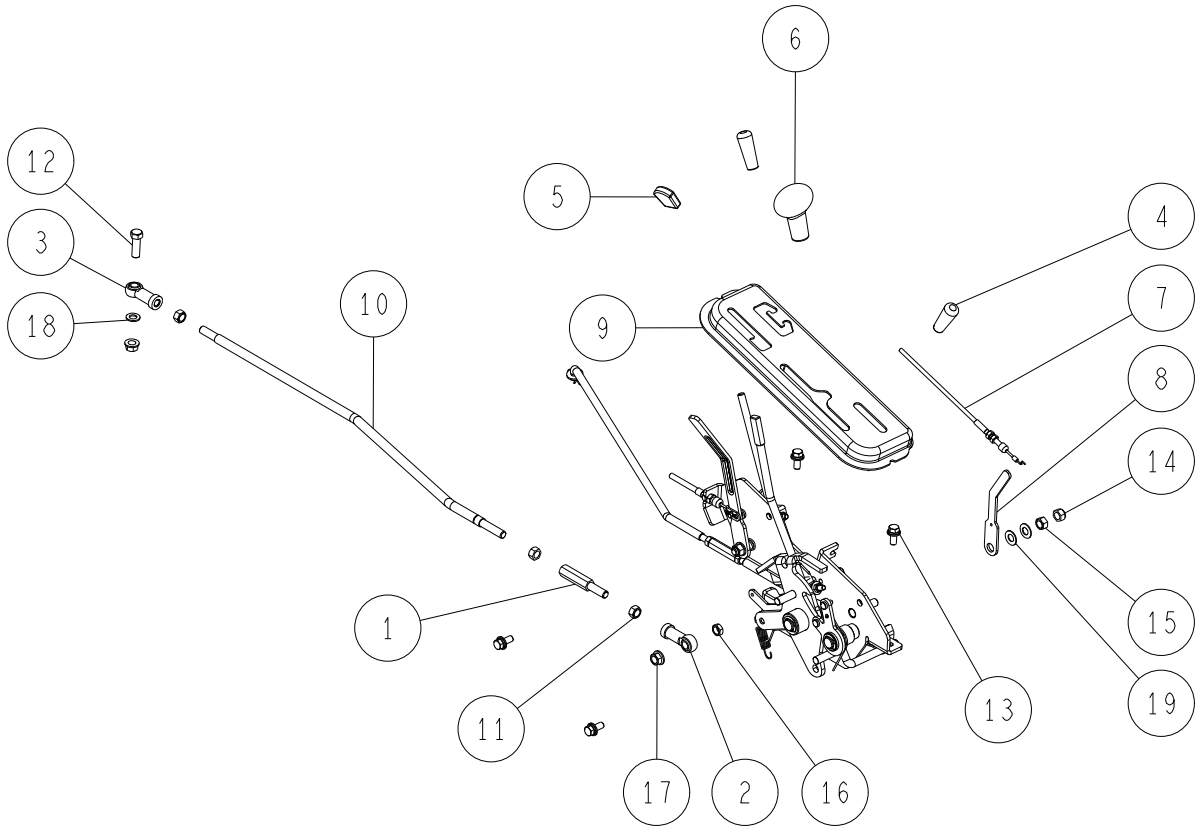

Ref.	Parts Number	Parts Name	Quantity	Remarks
-	0348-11000-00	Shift Rod Assy	1	Include : 1,2,3,10,11,15
1	80-1485-265-00	Shift Rod Adjuster	1	
2	80-1487-962-10	Rod End PHS10ECL	1	
3	80-1487-964-10	Rod End PHS10EC	1	
4	0207-72600	Lever Grip 8 (black)	2	
5	0215-70600	Lever Grip (Red)	1	
6	0221-13200	Change Grip	1	
7	0322-75600	Throttle Wire(B&S)	1	Briggs & Stratton
	0322-75400	Throttle Wire	1	Kawasaki
8	0312-12900	Throttle Lever	1	
9	0348-1020G	Control Guide CMP (Green)	1	
10	0348-11100	Shift Rod	1	
11	83-1488-195-02	Mini Hexagonal Nut M10 (L)	1	
12	89-1213-100302	Mini Hexagonal Bolt (8T) M10*30	1	
13	89-1233-080202	Mini Hexagonal Bolt (PWSW) M8*20	4	
14	89-1561-100002	Mini Hexagonal U Nut M10	1	
15	89-1611-100042	Mini Hexagonal Nut M10	3	
16	89-1613-100042	Mini Hexagonal Nut (3 sorts) M10	1	
17	89-1631-100042	Flange Mini Hexagonal Nut M10	2	
18	89-1711-100002	Flat Washer 10*18*1.6	1	
19	89-1852-100001	Belleville Spring H10	2	

37/55 Control 2/3

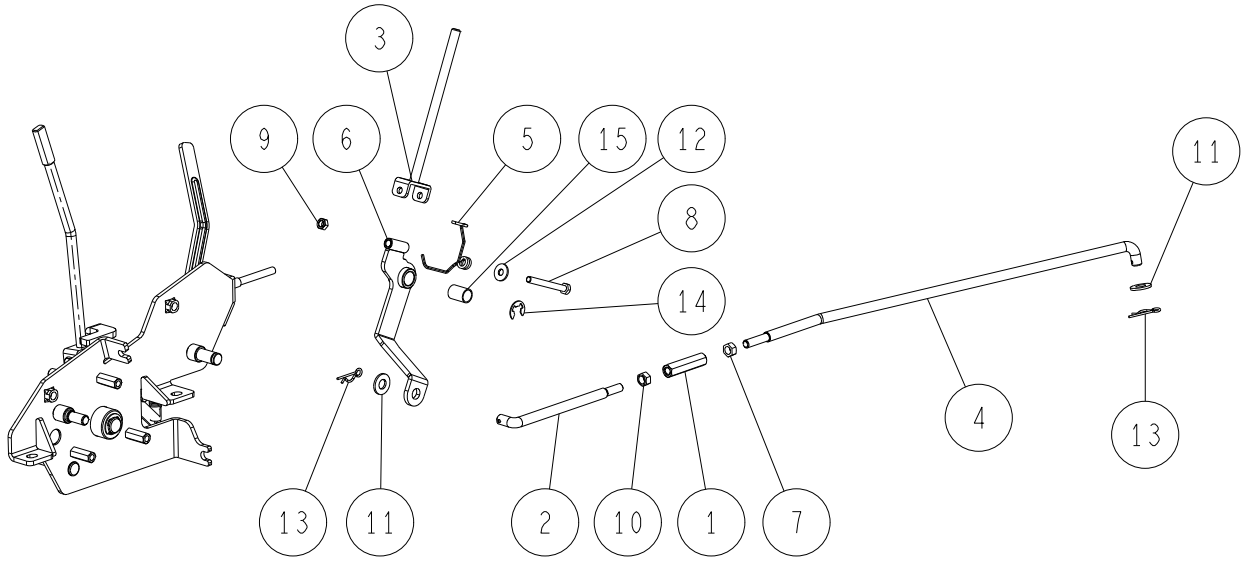

Ref.	Parts Number	Parts Name	Quantity	Remarks
-	0244-14500	Sub Change Rod Assy	1	Include : 1,2,4,7,10
1	80-1791-597-00	Turn Buckle 8*50	1	
2	0207-11100	Sub Change Rod (front)	1	
3	0244-12700	Sub Change Lever CMP	1	
4	0244-13500	Sub Change Rod (rear)	1	
5	0312-13700	Spring for Change Lever	1	
6	0348-1040H	Sub Change Arm CMP (Metallic Grey)	1	
7	83-1484-195-00	Mini Hexagonal Nut M8 (L)	1	
8	89-1113-060552	Hexagonal Bolt (8T) M6*55	1	
9	89-1551-060002	Hexagonal U Nut M6	1	
10	89-1611-080042	Mini Hexagonal Nut M8	1	
11	89-1712-100002	Flat Washer 10*21*2.1	2	
12	89-1713-060002	Flat Washer 6 (large)	1	
13	89-2131-100002	Snap Pin 10	1	
14	89-2521-000100	E Type Ring 10	2	
15	89-3510-012200	DU Bush 12.20	1	

38/55 Control 3/3

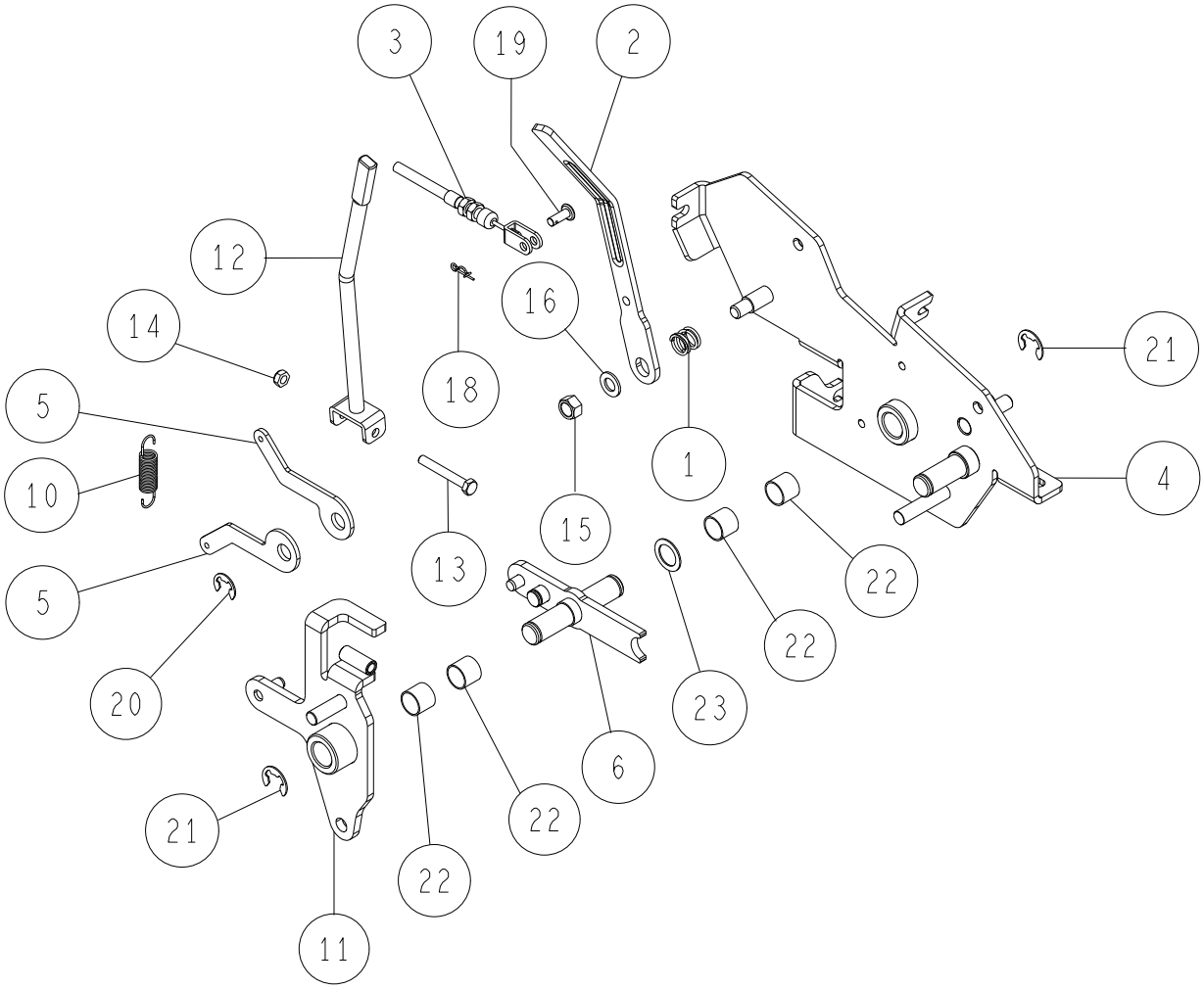

Ref.	Parts Number	Parts Name	Quantity	Remarks
1	80-1020-263-00	Control Lever Shaft Spring	1	
2	0244-13200	Differential Lock Lever CMP	1	
3	0244-72410	Defferential Lock Wire	1	
4	0312-1210H	Change Bracket CMP (Metallic Grey)	1	
5	0312-1231H	Neutral Arm (Metallic Grey)	2	
6	0329-12500	Spring for Change Pedal	1	
7	0347-1610H	Change Lever Guide CMP (Metallic Grey)	1	
8	0347-1620H	Change Lever Base CMP (Metallic Grey)	1	
9	0348-10300	Change Lever CMP	1	
10	83-1020-363-00	Thrust Washer 16*24*1.0	1	
11	89-1113-060452	Hexagonal Bolt (8T) M6*45	1	
12	89-1551-060002	Hexagonal U Nut M6	1	
13	89-1561-100002	Mini Hexagonal U Nut M10	1	
14	89-1711-100002	Flat Washer 10*18*1.6	1	
15	89-2132-060002	Snap Pin 6 (with stopper)	1	
16	89-2181-060162	Flat Head Pin 6*16	1	
17	89-2521-000100	E Type Ring 10	1	
18	89-2521-000120	E Type Ring 12	2	
19	89-3510-016150	DU Bush 16.15	4	

39/55 Cutting 1/6

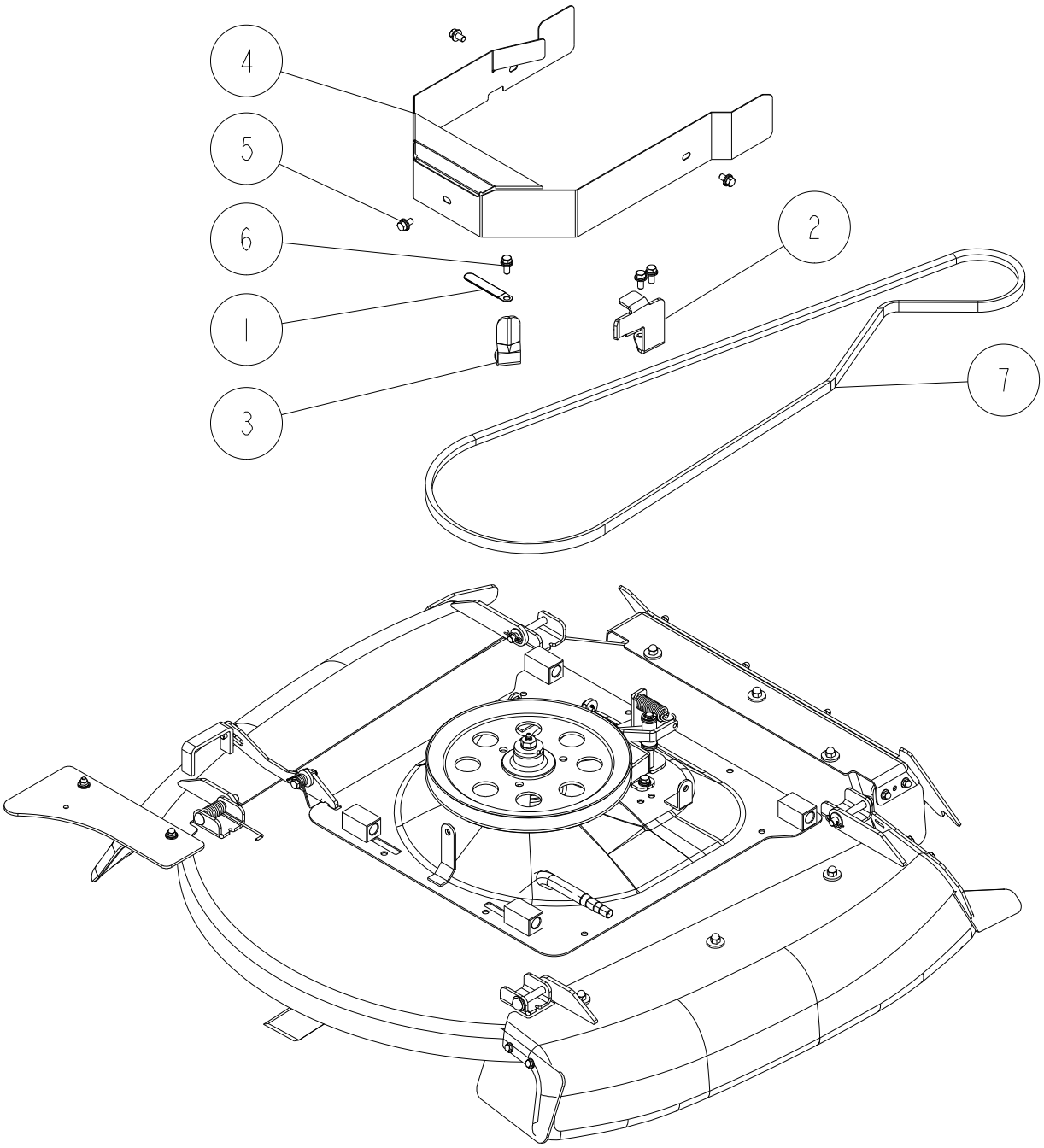

Ref.	Parts Number	Parts Name	Quantity	Remarks
1	80-1792-988-00	Harness Clip 8	1	
2	0244-4240H	Belt Holder Left (Metallic Grey)	1	
3	0244-4260H	Knife Pulley Belt Holder (Metallic Grey)	1	
4	0348-5010H	Knife Belt Cover CMP (Metallic Grey)	1	
5	89-1233-080162	Mini Hexagonal Bolt (PWSW) M8*16	3	
6	89-1233-080202	Mini Hexagonal Bolt (PWSW) M8*20	3	
7	89-6123-007802	V Belt SB-78 (W800)	1	RJ18M00124 ~

40/55 Cutting 2/6

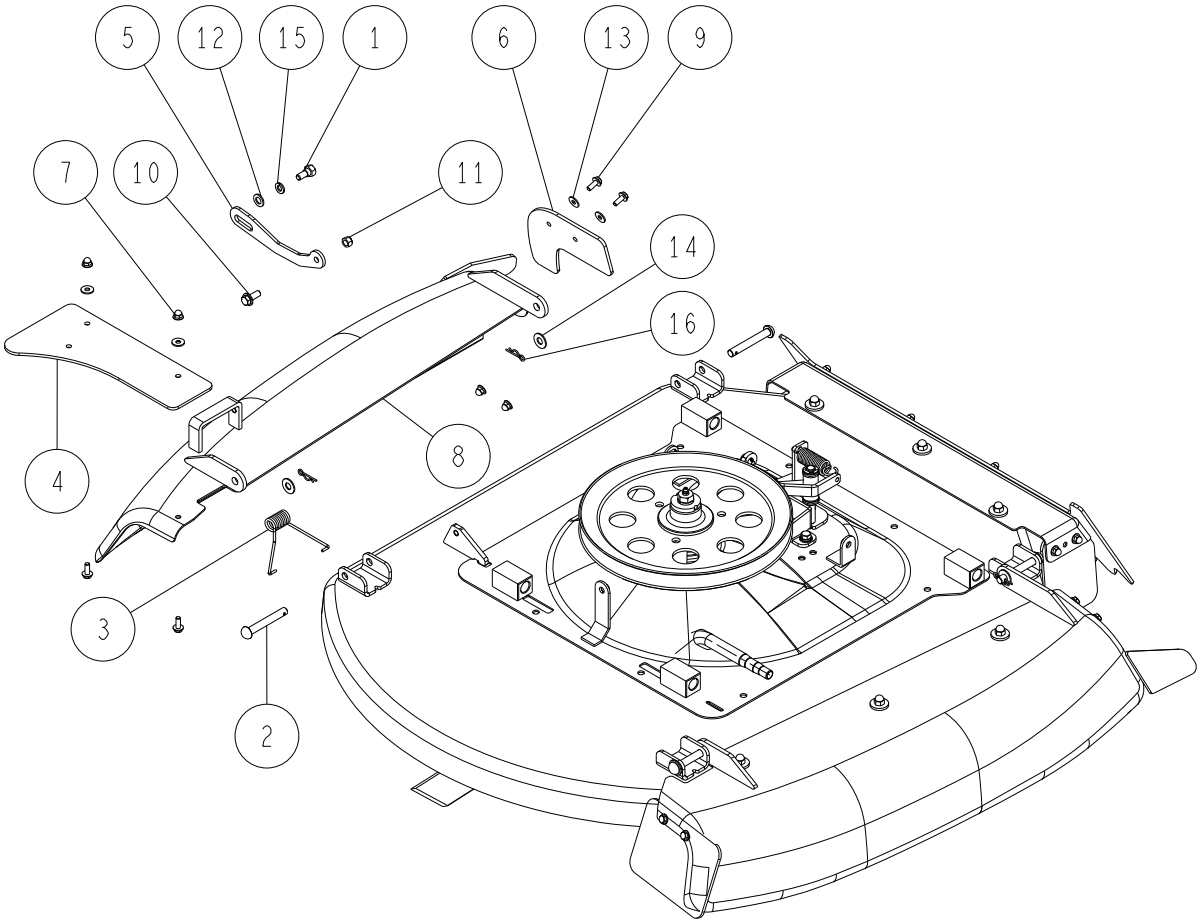

Ref.	Parts Number	Parts Name	Quantity	Remarks
1	80-1488-747-00	Bolt for Right Cover Up/Down Arm	1	
2	0244-63900	Round Head Pin 10*72	2	
3	0244-71600	Spring for Right Cover	1	
4	0255-60300	Right Cover Flapper	1	
5	0259-51700	Right Cover Up/Down Arm	1	
6	0290-50200	Side Flapper (Back Right)	1	
7	0312-77500	Flange Cap Nut M6 (Meck)	4	
8	0348-5020H	Right Cover CMP (Metallic Grey)	1	
9	89-1137-060172	Hexagonal Bolt (PW) M6*17	4	
10	89-1253-080202	Flange Mini Hexagonal Bolt (8T) M8*20	1	
11	89-1561-080002	Mini Hexagonal U Nut M8	1	
12	89-1711-100002	Flat Washer 10*18*1.6	1	
13	89-1713-060002	Flat Washer 6 (large)	4	
14	89-1714-100002	Flat Washer 10	2	
15	89-1750-080002	Spring Washer 8	1	
16	89-2131-100002	Snap Pin 10	2	

41/55 Cutting 3/6

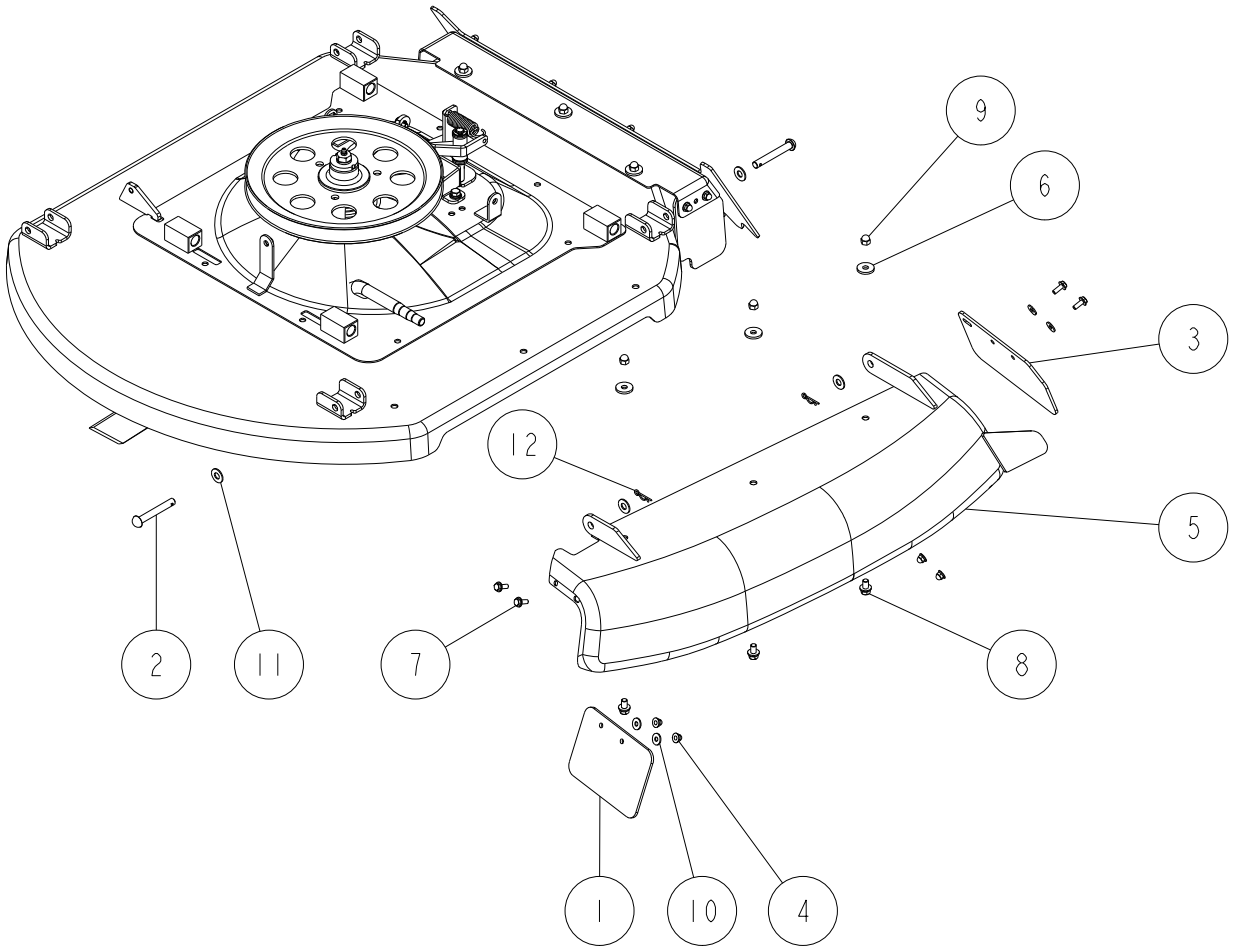

Ref.	Parts Number	Parts Name	Quantity	Remarks
1	0244-61800	Side Flapper (Front)	1	
2	0244-63900	Round Head Pin 10*72	2	
3	0255-60800	Rear Side Flapper (Left A)	1	
4	0312-77500	Flange Cap Nut M6 (Meck)	4	
5	0348-5030H	Left Cover CMP (Metallic Grey)	1	
6	83-1751-312-00	Washer 8*25*3.2	3	
7	89-1137-060172	Hexagonal Bolt (PW) M6*17	4	
8	89-1233-080162	Mini Hexagonal Bolt (PWSW) M8*16	3	
9	89-1671-080042	Mini Cap Nut M8	3	
10	89-1713-060002	Flat Washer 6 (large)	4	
11	89-1714-100002	Flat Washer 10	4	
12	89-2131-100002	Snap Pin 10	2	

42/55 Cutting 4/6

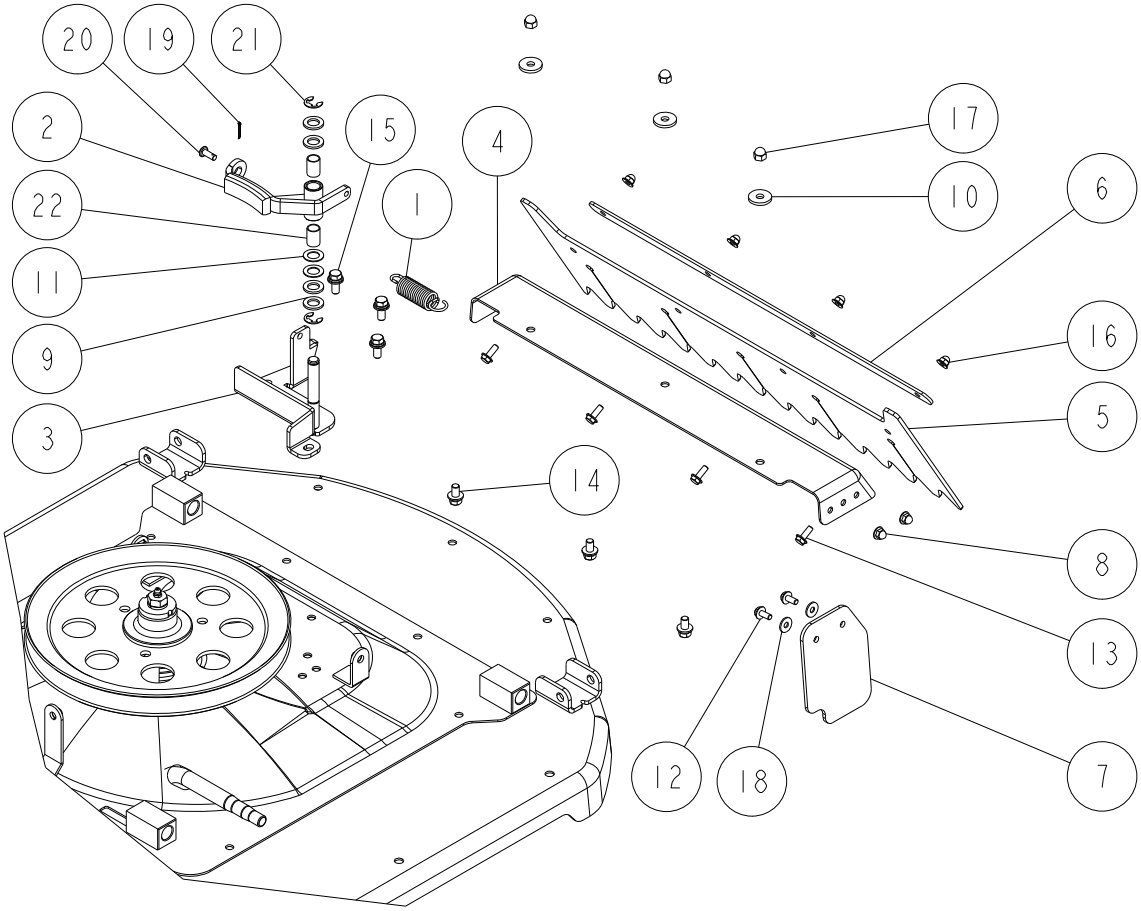

Ref.	Parts Number	Parts Name	Quantity	Remarks
1	80-1485-551-00	Driving Tension Spring	1	
2	0244-5060H	Knife Brake CMP (Metallic Grey)	1	
3	0244-5071H	Knife Brake Base CMP (Metallic Grey)	1	
4	0244-6120H	Rear Guard (Metallic Grey)	1	
5	0244-61300	Rear Guard Flapper	1	
6	0244-61400	Rear Guard Flapper Holder	1	
7	0312-50700	Side Rear Flapper (L)	1	
8	0312-77500	Flange Cap Nut M6 (Meck)	2	
9	83-1565-329-00	Washer 13*22*2.3	4	
10	83-1751-312-00	Washer 8*25*3.2	3	
11	83-1754-329-00	Washer 13*22*1.0	2	
12	89-1137-060152	Hexagonal Bolt (PW) M6*15	2	
13	89-1137-060172	Hexagonal Bolt (PW) M6*17	4	
14	89-1233-080162	Mini Hexagonal Bolt (PWSW) M8*16	3	
15	89-1233-080202	Mini Hexagonal Bolt (PWSW) M8*20	3	
16	89-1581-060042	Flange Cap Nut M6	4	
17	89-1671-080042	Mini Cap Nut M8	3	
18	89-1713-060002	Flat Washer 6 (large)	2	
19	89-2120-200152	Split Pin 2*15	1	
20	89-2181-060162	Flat Head Pin 6*16	1	
21	89-2521-000100	E Type Ring 10	2	
22	89-3510-012200	DU Bush 12.20	2	

43/55 Cutting 5/6

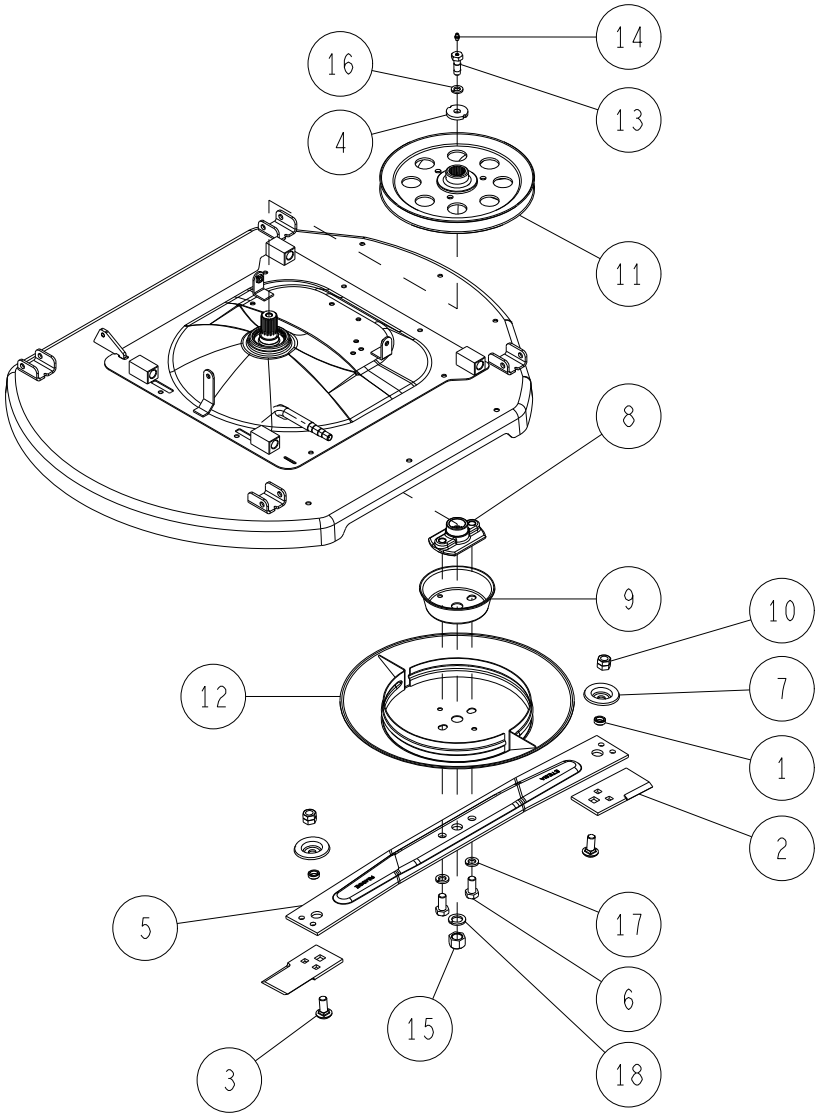

Ref.	Parts Number	Parts Name	Quantity	Remarks
1	80-1483-818-00	Knife Collar	2	
2	80-1483-821-00	Knife	2	
3	0207-50200	Knife Setting Bolt M14*34	1	
4	0221-76100	Washer 12*40*6	1	
5	0217-50500	Knife Stay (RM95E)	1	
6	83-1483-129-00	Mini Hexagonal Bolt (8T) M12*30	2	
7	0244-51800	Nut Guard 14	2	
8	0238-5110H	Knife Bracket (Metallic Grey)	1	
9	0244-5210H	Knife Neck Guard (Metallic Grey)	1	
10	0244-74600	Hard Lock Nut M14	2	
11	0312-5030H	Knife Pulley CMP (Metallic Grey)	1	
12	0312-5180H	Washer Plate CMP (Metallic Grey)	1	
13	0322-52200	Nipple Bolt M12*35 (8T)	1	
14	83-1415-975-00	Grease Nipple M6	1	
15	83-1483-175-00	Bag Nut M20 (Lock)	1	
16	89-1750-120002	Spring Washer 12	3	
18	89-1750-200002	Spring Washer 20	1	

44/55 Cutting 6/6

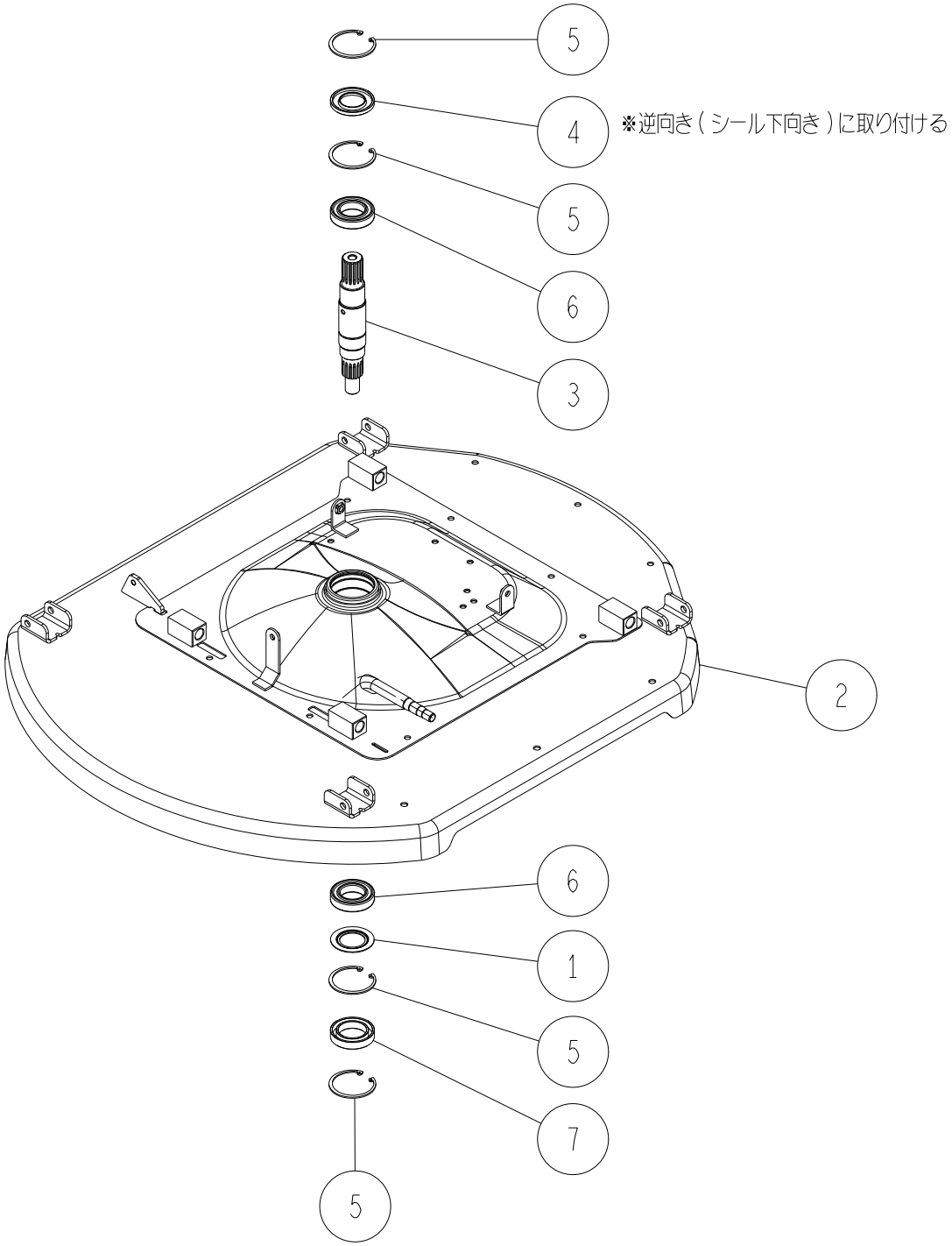

Ref.	Parts Number	Parts Name	Quantity	Remarks
1	0262-50100	Dust Plate	1	
2	0312-5311H	Safety Cover CMP (Metallic Grey)	1	
3	0322-52100	Vertical Shaft	1	
4	0322-72700	Oil Seal UE 35.62.6	1	
5	89-2512-000620	Snap Ring (R62)	4	
6	89-3115-060074	Bearing 6007 2RS	2	
7	89-5121-406212	Oil Seal UE 40.62.12	1	

45/55 Seat 1/3

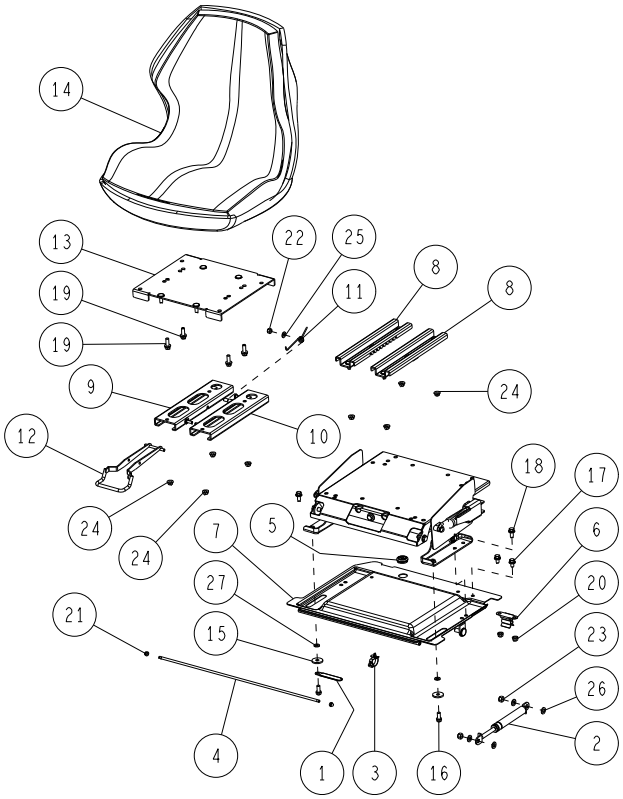

Ref.	Parts Number	Parts Name	Quantity	Remarks
1	80-1792-988-00	Harness Clip 8	1	
2	0207-72700	Gas Spring KMF 50-40	1	
3	0221-71900	Clip CT-339	1	
4	0244-22200	Seat Bracket Shaft	1	
5	0244-73700	Grommet 24	1	
6	0312-70700	Bonnet Clip	1	
7	0322-2160G	Seat Bracket CMP (Green)	1	
8	0341-21201	Lower Slide CMP (White)	2	
9	0341-21301	Upper Slide (R) CMP (White)	1	
10	0341-21401	Upper Slide (L) CMP (White)	1	
11	0341-21500	Seat Lever Spring	1	
12	0341-21801	Slide Lever CMP (White)	1	
13	0348-24101	Upper Seat Receiver CMP (White)	1	
14	0348-71100	Seat (COBO)	1	
15	83-1415-312-00	Washer 8*30*3.2	2	
16	89-1232-080202	Mini Hexagonal Bolt (SW) M8*20	2	
17	89-1233-080162	Mini Hexagonal Bolt (PWSW) M8*16	2	
18	89-1233-080202	Mini Hexagonal Bolt (PWSW) M8*20	2	
19	89-1233-080252	Mini Hexagonal Bolt (PWSW) M8*25	4	
20	89-1543-080002	Mini Hexagonal Nut (SW) M8	2	
21	89-1553-060002	Bag Hexagonal U Nut M6	2	
22	89-1561-080002	Mini Hexagonal U Nut M8	1	
23	89-1561-100002	Mini Hexagonal U Nut M10	2	
24	89-1631-080042	Flange Mini Hexagonal Nut M8	8	
25	89-1711-080002	Flat Washer 8	1	
26	89-1711-100002	Flat Washer 10*18*1.6	4	
27	89-1750-080002	Spring Washer 8	2	

46/55 Seat 2/3

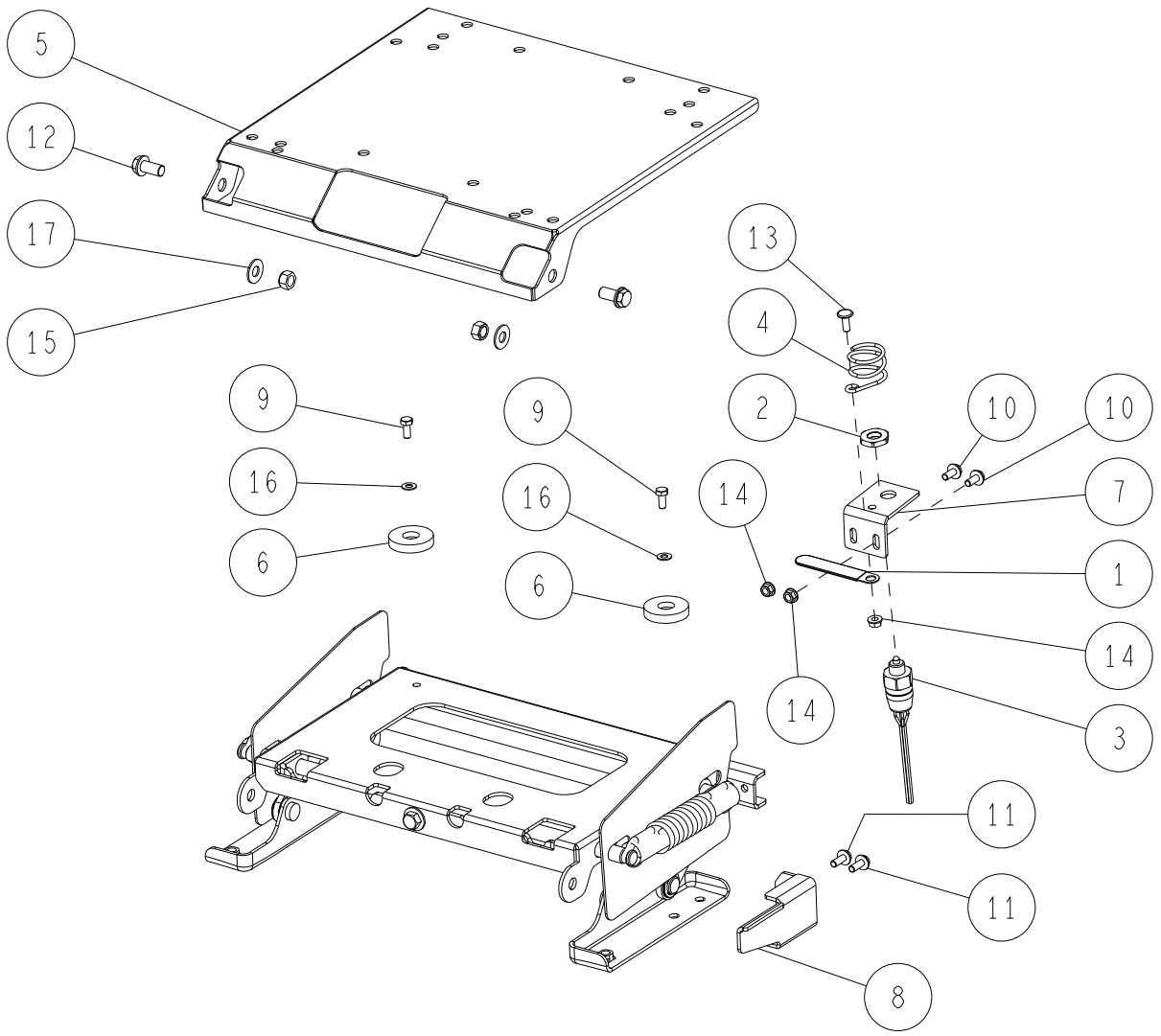

Ref.	Parts Number	Parts Name	Quantity	Remarks
1	80-1792-988-00	Harness Clip 8	1	
2	0207-72800	Switch Lock Nut	1	
3	0207-74400	Safety Switch K17850	1	
4	0207-72900	Seat Switch Spring	1	
5	0341-21101	Seat Receiver CMP (White)	1	
6	0342-22100	Rubber, Seat Spacer	2	
7	0348-20900	Seat Switch Stay	1	
8	0348-21511	Clutch Cancellation Stay (White)	1	
9	89-1111-060142	Hexagonal Bolt M6*14	2	
10	89-1137-060152	Hexagonal Bolt (PW) M6*15	2	
11	89-1137-060172	Hexagonal Bolt (PW) M6*17	2	
12	89-1253-100202	Flange Mini Hexagonal Bolt (8T) M10*20	2	
13	89-1390-060162	Welded Bolt M6*16	1	
14	89-1531-060042	Flange Nut M6	3	
15	89-1561-100002	Mini Hexagonal U Nut M10	2	
16	89-1711-060002	Flat Washer 6	2	
17	89-1714-100002	Flat Washer 10	2	

47/55 Seat 3/3

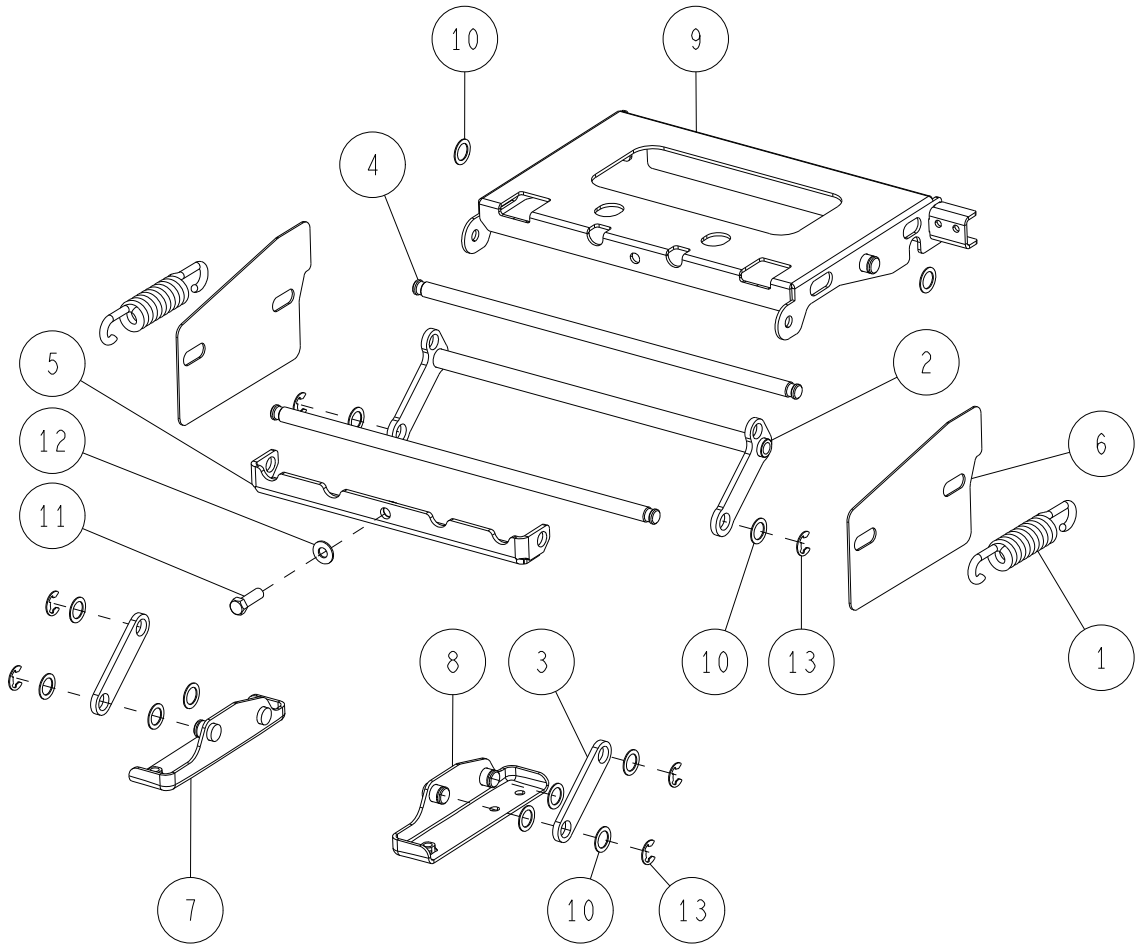

Ref.	Parts Number	Parts Name	Quantity	Remarks
1	0244-71200	Spring for Seat Link	2	
2	0312-21601	Parallel Seat Link CMP (White)	1	
3	0312-21701	Seat Parallel Link (B) (White)	2	
4	0312-21800	Spring Shaft	2	
5	0312-22101	Spring Shaft Hook CMP (White)	1	
6	0329-80300	Seat Link Shield (RMK150)	2	
7	0348-2110G	Link Upper Bracket (R) CMP (Green)	1	
8	0348-2120G	Link Upper Bracket (L) CMP (Green)	1	
9	0348-21311	Link Upper Bracket CMP (White)	1	
10	83-1020-363-00	Thrust Washer 16*24*1.0	12	
11	89-1211-100302	Mini Hexagonal Bolt M10*30	1	
12	89-1714-100002	Flat Washer 10	1	
13	89-2521-000120	E Type Ring 12	6	

48/55 Engine(Kawasaki) 1/3

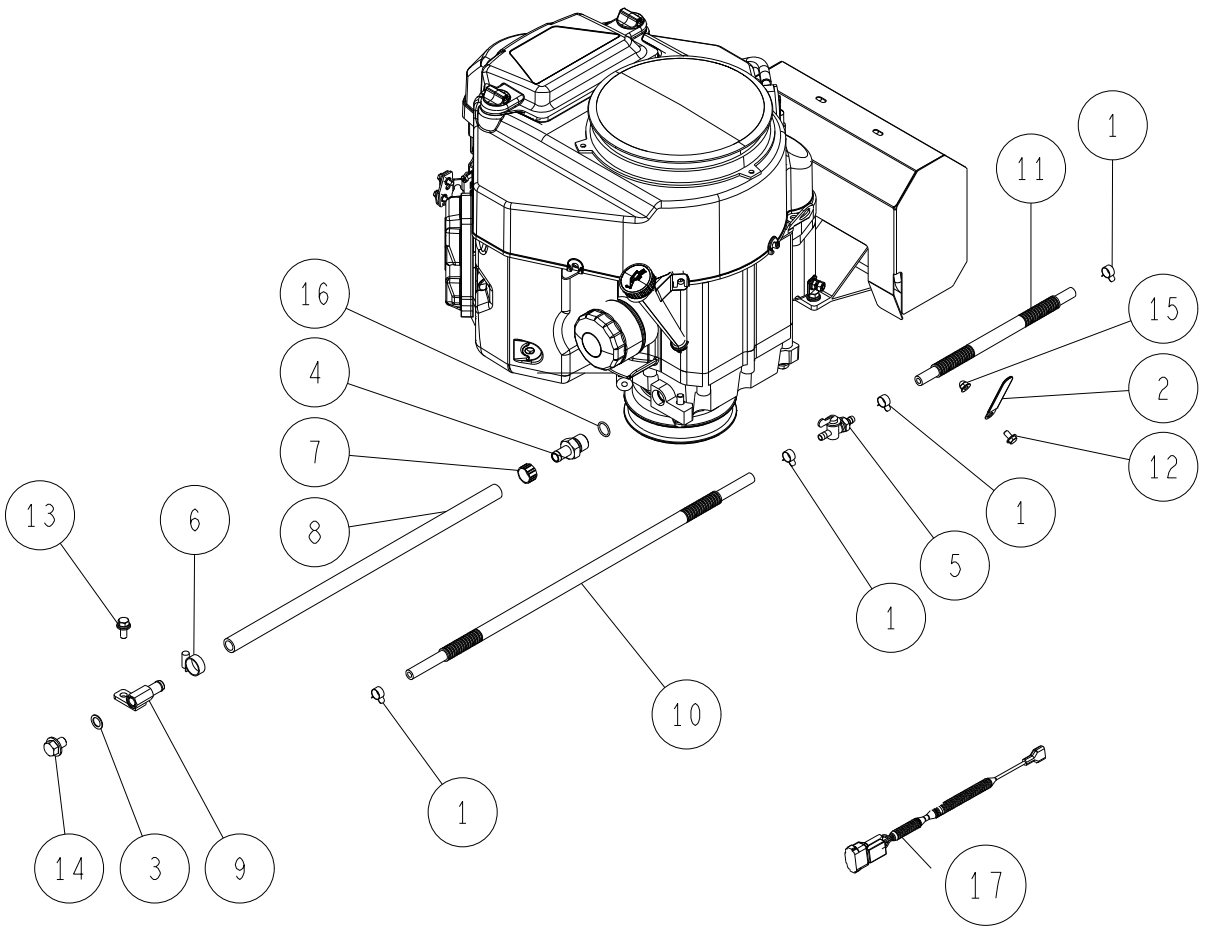

Ref.	Parts Number	Parts Name	Quantity	Remarks
-	0322-74000	Fuel Cock Assy (K)	1	Include : 1,5,11
-	0322-72500	Fuel Hose 270L & Clip	1	Include : 1,11
-	0322-72400	Fuel Hose 600L & Clip	1	Include : 1,10
-	0312-44100	Oil Drain Assy (K)	1	Include : 4,6,7,8,9,16
1	80-1483-988-00	Hose Clip 17	4	
2	80-1792-988-00	Harness Clip 8	1	
3	0207-74900	Copper Packing 12.5*19*1.0	1	
4	0244-40700	Drain Bolt (K)	1	
5	0244-74500	Fuel Cock	1	
6	0244-75700	Hose Band 22	1	
7	0271-73300	Socket	1	
8	0312-44200	Oil Drain Hose (K)	1	
9	0312-44300	Drain End CMP (K)	1	
10	0322-70400	Fuel Hose 600L	1	
11	0322-70500	Fuel Hose 270L	1	
12	89-1137-060122	Hexagonal Bolt (PW) M6*12	1	
13	89-1233-080202	Mini Hexagonal Bolt (PWSW) M8*20	1	
14	89-1251-120152	Flange Mini Hexagonal Bolt M12*15	1	
15	89-1581-060042	Flange Cap Nut M6	1	
16	89-5221-016000	O Ring P16	1	
17	0312-77300	Harness (K)	1	

49/55 Engine(Kawasaki) 2/3

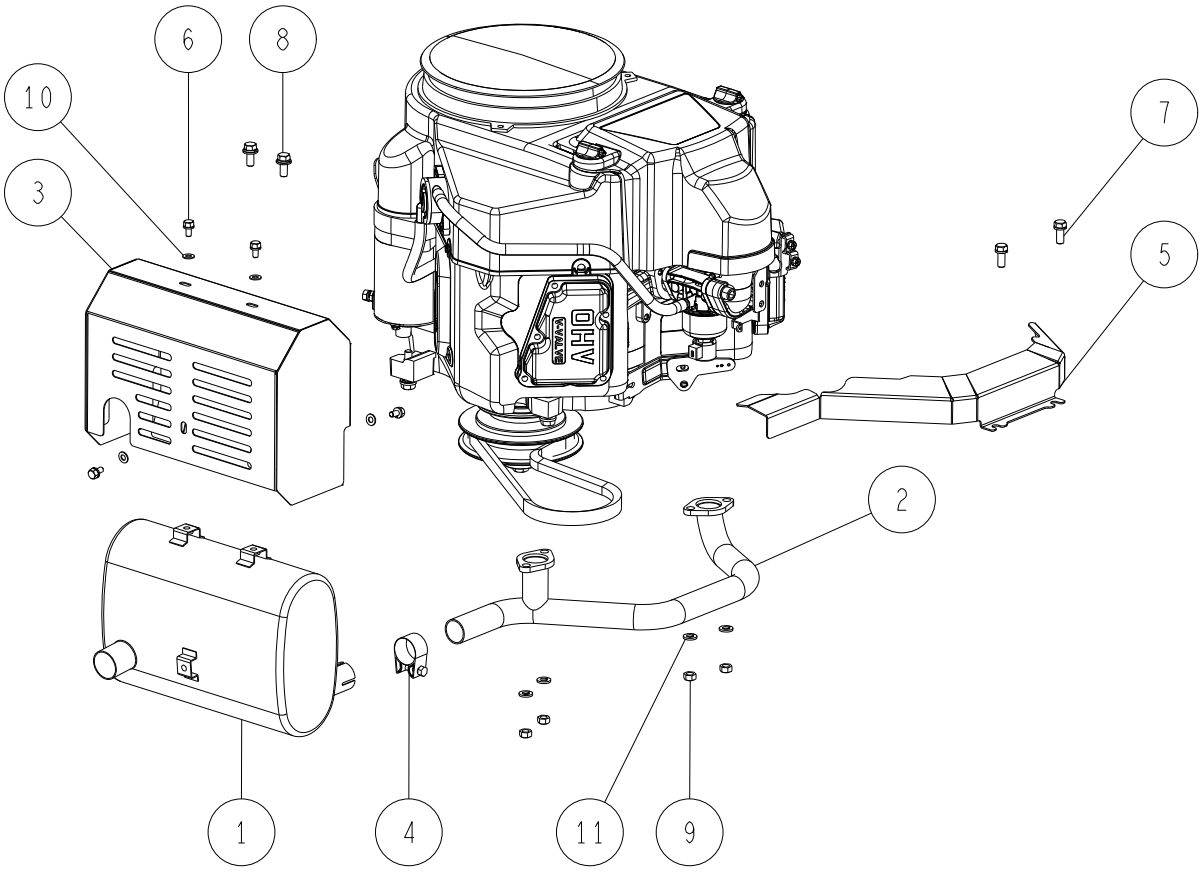

Ref.	Parts Number	Parts Name	Quantity	Remarks
1	0312-40100	Muffler	1	
2	0322-40100	Exhaust Pipe CMP (FS481V)	1	
3	0312-40500	Muffler Cover CMP	1	
4	0312-70500	Muffler Band	1	
5	0329-40600	Exhaust Pipe Cover (RMK150)	1	
6	89-1132-060122	Hexagonal Bolt (SW) M6*12	4	
7	89-1232-080202	Mini Hexagonal Bolt (SW) M8*20	2	
8	89-1233-080202	Mini Hexagonal Bolt (PWSW) M8*20	2	
9	89-1611-080042	Mini Hexagonal Nut M8	4	
10	89-1711-060002	Flat Washer 6	4	
11	89-1750-080002	Spring Washer 8	4	

50/55 Engine(Kawasaki) 3/3

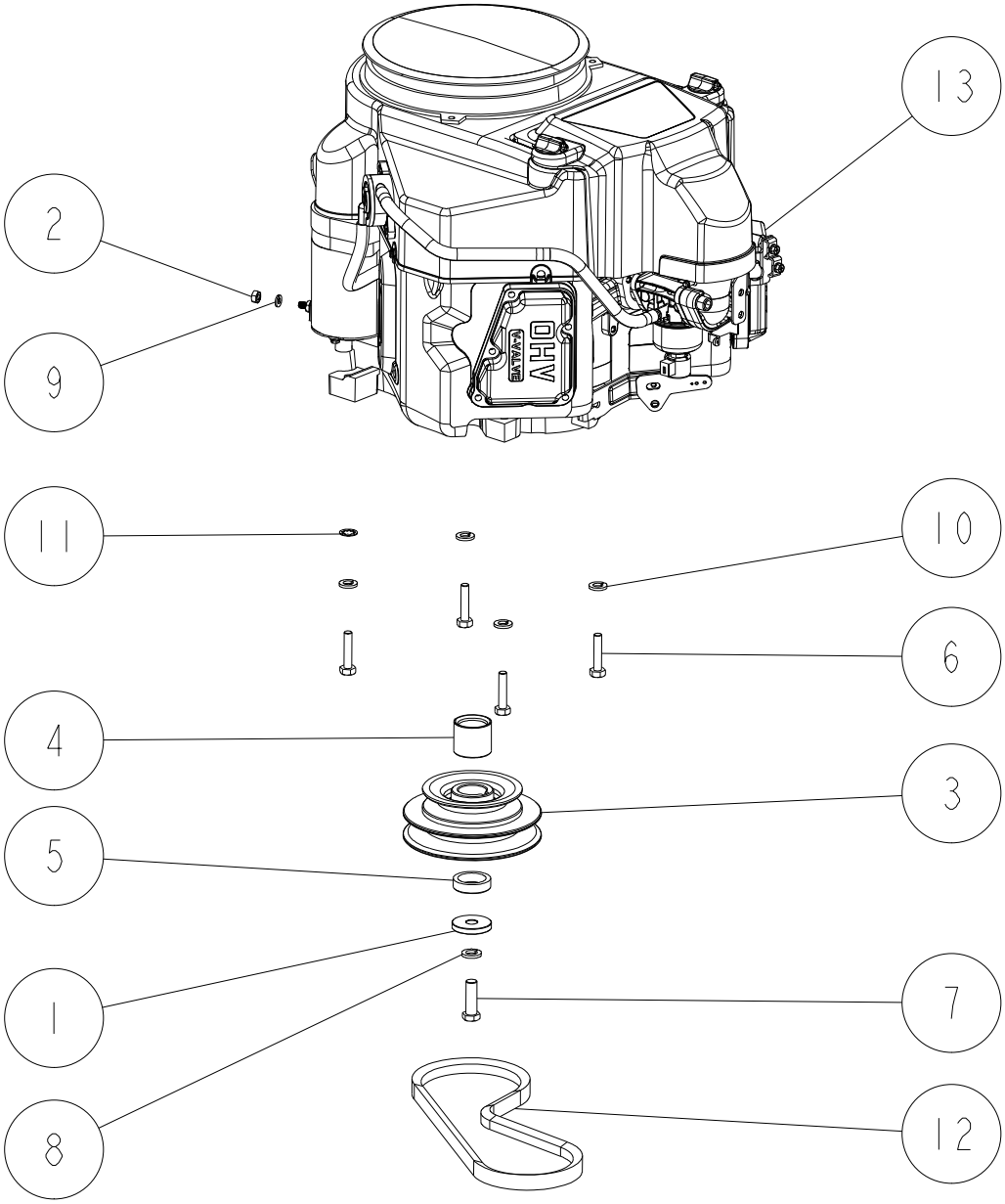

Ref.	Parts Number	Parts Name	Quantity	Remarks
1	80-1487-516-00	Washer 11*40*6	1	
2	0207-76300	Nut UNF 1/4	1	
3	0322-42100	Engine Pulley	1	
4	0240-51300	Engine Collar 33	1	
6	0312-42100	Hexagonal Bolt (8T) UNC 3/8-16*38	4	
7	83-1437-115-00	Hexagonal Bolt (8T) UNF7/16*35	1	
8	83-1493-300-00	Spring Washer 7/16	1	
9	89-1750-060002	Spring Washer 6	1	
10	89-1750-100002	Spring Washer 10	4	
11	89-1812-100002	Toothed washer (inside) 10	1	
12	89-6123-003202	V Belt SB-32 (W800)	1	
13	9024-0010	Kawasaki Engine FS541V-AG82	1	

51/55 Engine(B&S) 1/3

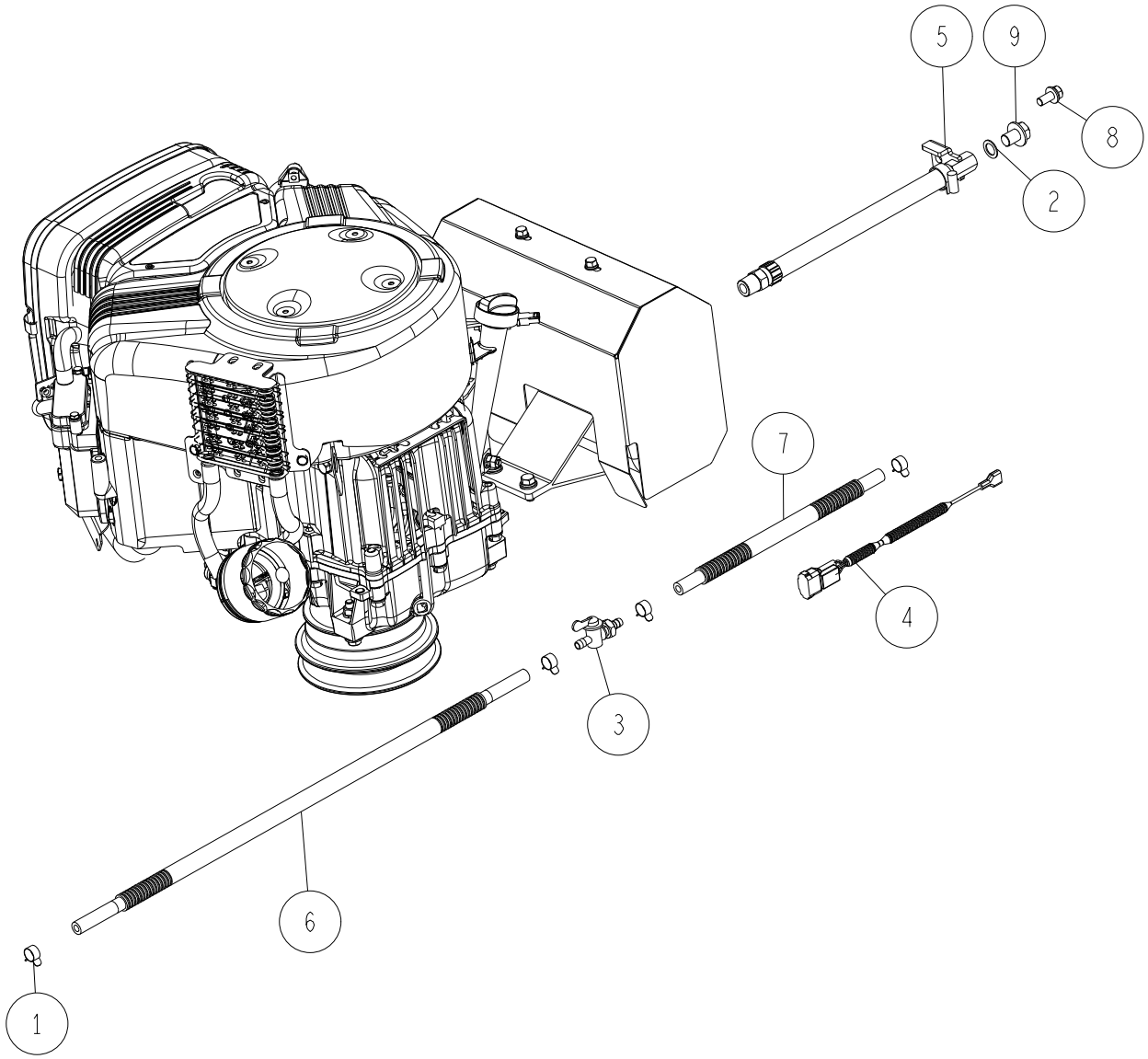

Ref.	Parts Number	Parts Name	Quantity	Remarks
-	0322-74000	Fuel Cock Assy (K)	1	Include : 1,3,7
-	0322-72500	Fuel Hose 270L & Clip	1	Include : 1,7
-	0322-72400	Fuel Hose 600L & Clip	1	Include : 1,6
1	80-1483-988-00	Hose Clip 17	4	
2	0207-74900	Copper Packing 12.5*19*1.0	1	
3	0244-74500	Fuel Cock	1	
4	0312-77400	Harness (B&S)	1	
5	0322-43100	Oil Drain Hose Assy (B&S)	1	
6	0322-70400	Fuel Hose 600L	1	
7	0322-70500	Fuel Hose 270L	1	
8	89-1233-080202	Mini Hexagonal Bolt (PWSW) M8*20	1	
9	89-1251-120152	Flange Mini Hexagonal Bolt M12*15	1	

52/55 Engine(B&S) 2/3

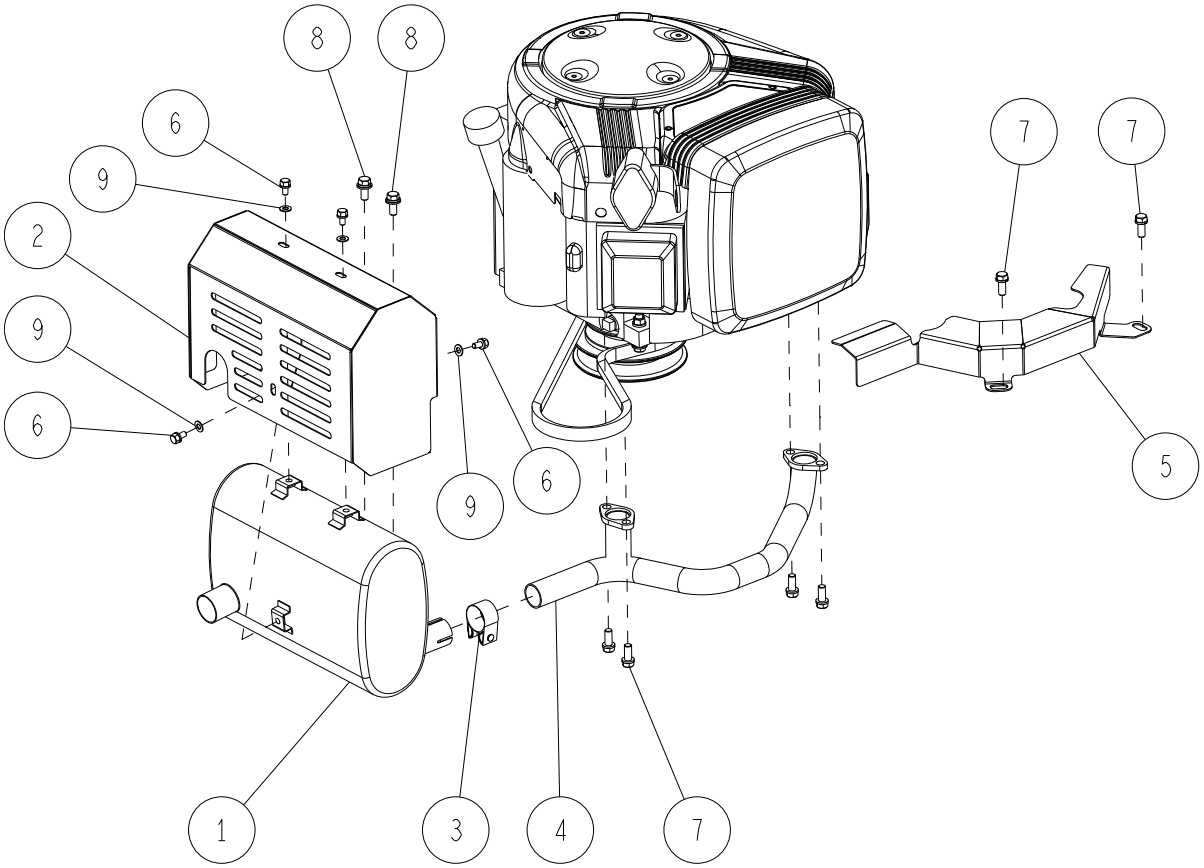

Ref.	Parts Number	Parts Name	Quantity	Remarks
1	0312-40100	Muffler	1	
2	0312-40500	Muffler Cover CMP	1	
3	0312-70500	Muffler Band	1	
4	0322-40200	Exhaust Pipe CMP(B&S)	1	
5	0322-40400	Exhaust Pipe Cover(B&S)	1	
6	89-1132-060122	Hexagonal Bolt (SW) M6*12	4	
7	89-1232-080202	Mini Hexagonal Bolt (SW) M8*20	4	
8	89-1233-080202	Mini Hexagonal Bolt (PWSW) M8*20	4	
9	89-1711-060002	Flat Washer 6	4	

53/55 Engine(B&S) 3/3

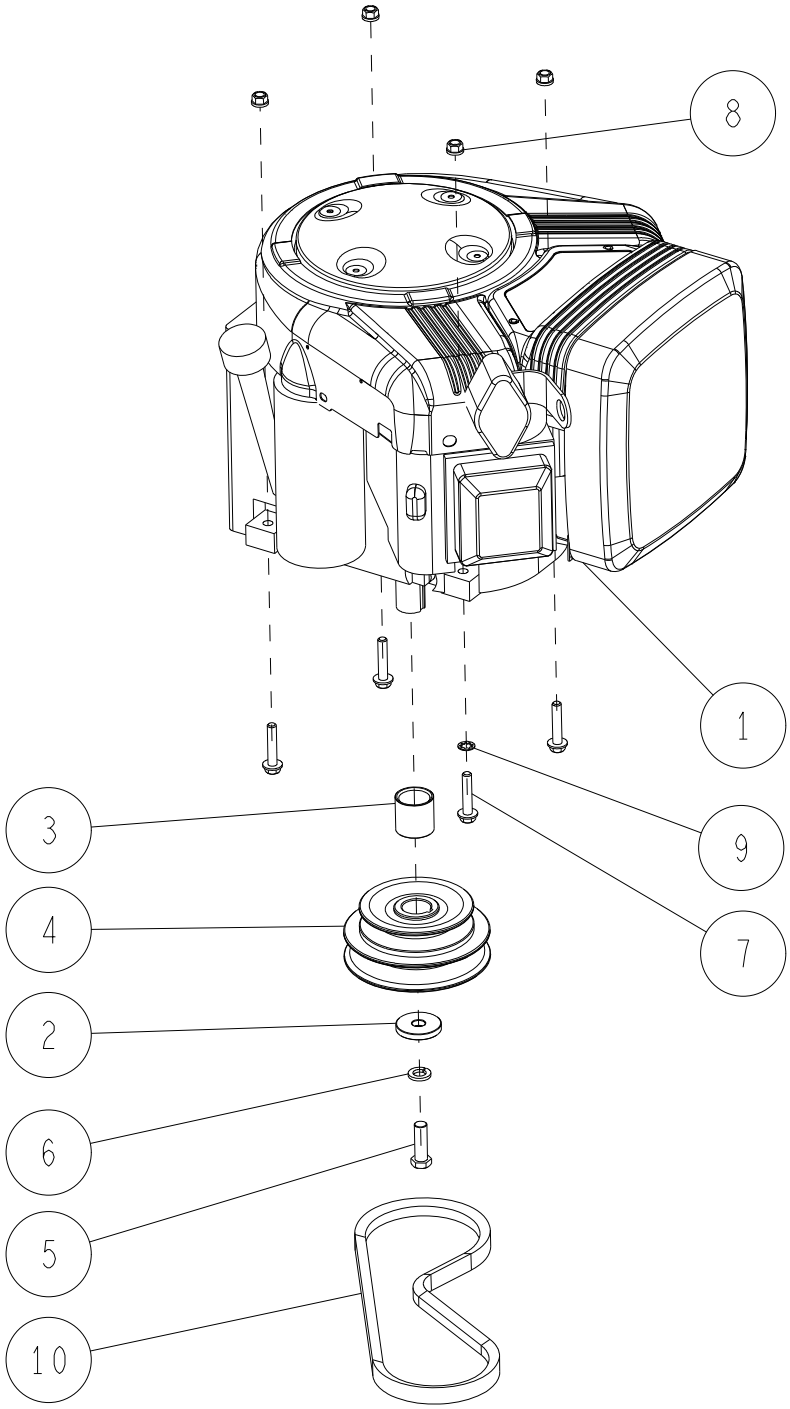

Ref.	Parts Number	Parts Name	Quantity	Remarks
1	9011-0381	356777-0143-B5 (B&S 18HP)	1	
2	80-1487-516-00	Washer 11*40*6	1	
3	0240-51300	Engine Collar 33	1	
4	0322-42100	Engine Pulley	1	
5	83-1437-115-00	Hexagonal Bolt (8T) UNF7/16*35	1	
6	83-1493-300-00	Spring Washer 7/16	1	
7	89-1253-080402	Flange Mini Hexagonal Bolt (8T) M8*40	4	
8	89-1543-080002	Mini Hexagonal Nut (SW) M8	4	
9	89-1812-080002	Toothed washer (inside) 8	1	
10	89-6123-003202	V Belt SB-32 (W800)	1	

LABEL 1/2

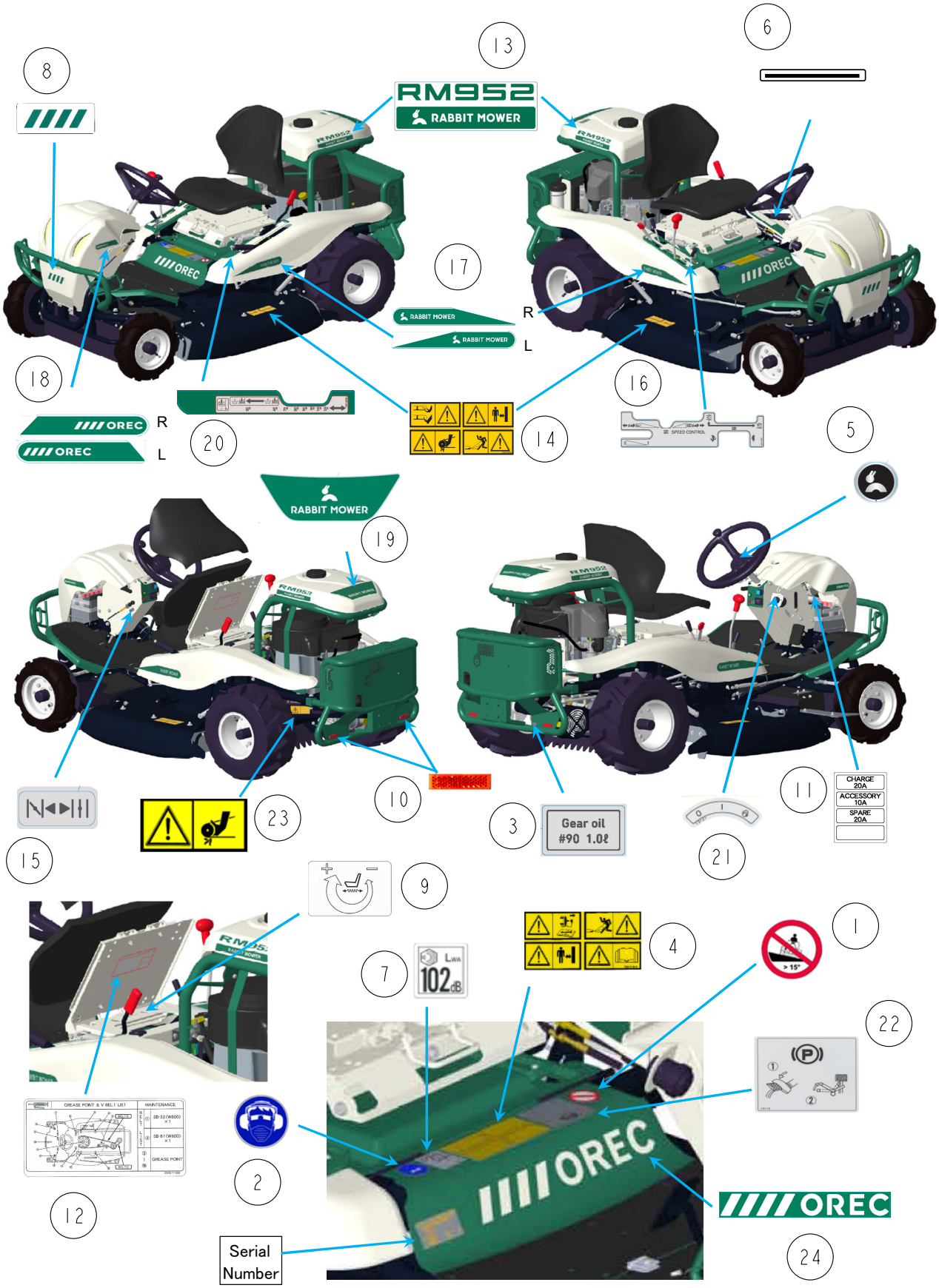
RM952
RABBIT MOWER
OREC
R
L
Gear oil
#90 1.0ℓ
CHARGE 20A
ACCESSORY 10A
SPARE 20A
102dB
Serial Number

55/55 LABEL 2/2

Ref.	Parts Number	Parts Name	Quantity	Remarks
1	0215-83100	Attention Mark for Slope	1	
2	0215-83200	Label, Protection Equipment	1	
3	0217-70800	Label, Gear Oil 1.0L	1	
4	0223-76100	Label, Caution (Large)	1	
5	0352-76600	Label, Handle (Blue)	1	
6	0259-80700	Label, Cutting Height Line	1	
7	0310-71300	Label, Noise 102db	1	
8	0342-70400	Label, Front Mark	1	
9	0312-86100	Label, Seat Spring Adjusting	1	
10	0322-77900	Reflection Seat (Red)	2	
11	0322-78300	Label, Fuse Box	1	
12	0322-78600	Label, Maintenance & Belt Size	1	
13	0346-79100	Label, Model (RM952)	2	
14	0329-76200	Label, Caution for Hand and Leg etc	2	
15	0329-77510	Label, Choke (RMK150)	1	
16	0346-79200	Label, Control	1	
17	0342-70700	Label, Side Cowl Mark Set (RM)	1	
18	0347-77310	Label, Front Side Mark Set (OREC)	1	
19	0343-70410	Label, Symbol Mark (RM)	1	
20	0347-98200	Label, Cutting Height Adjusting (RM982F)	1	
21	80-1488-912-00	Label, Key (13121)	1	
22	80-1488-921-00	Label Pedal Stopper (13113)	1	
23	80-1488-928-10	Label, Caution for Belt Involving	1	
24	0342-70500	Label, Step Mark (OREC)	1	
25	-	Serial Number	1	